Sushil Kainth

Die Design for Extrusion of Plastic Tubes and Pipes

A Practical Guide

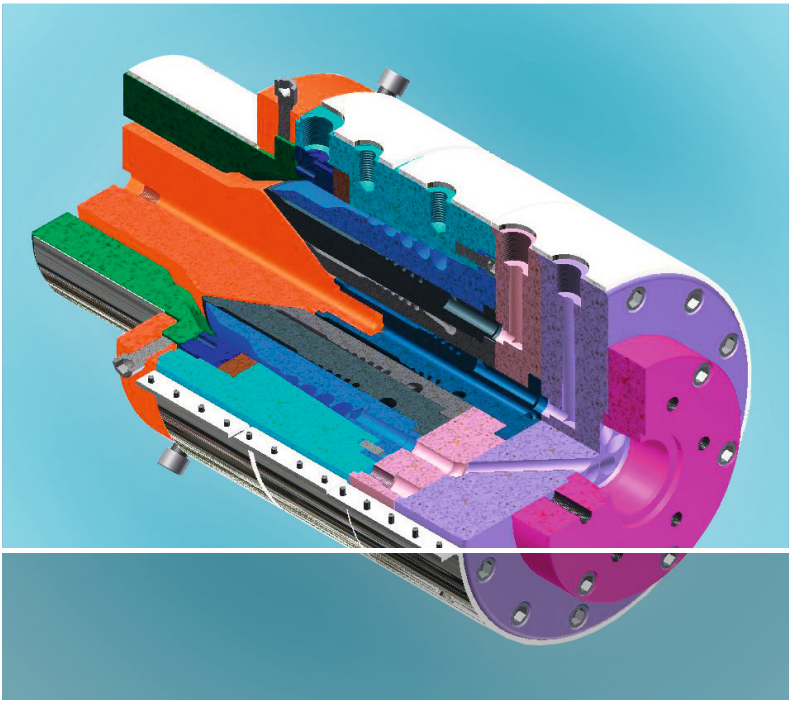

HANSER

Sushil Kainth

Die Design for Extrusion of Plastic Tubes and Pipes

A Practical Guide

HANSER

Hanser Publishers, Munich

Hanser Publications, Cincinnati

The Author:

Sushil Kainth, Walsall, West Midlands, United Kingdom

Distributed in the Americas by:
Hanser Publications
6915 Valley Avenue, Cincinnati, Ohio 45244-3029, USA
Fax: (513) 527-8801
Phone: (513) 527-8977
www.hanserpublications.com

Distributed in all other countries by:
Carl Hanser Verlag
Postfach 86 04 20, 81631 München, Germany
Fax: +49 (89) 98 48 09
www.hanser-fachbuch.de

The use of general descriptive names, trademarks, etc., in this publication, even if the former are not especially identified, is not to be taken as a sign that such names, as understood by the Trade Marks and Merchandise Marks Act, may accordingly be used freely by anyone. While the advice and information in this book are believed to be true and accurate at the date of going to press, neither the authors nor the editors nor the publisher can accept any legal responsibility for any errors or omissions that may be made. The publisher makes no warranty, express or implied, with respect to the material contained herein.

The final determination of the suitability of any information for the use contemplated for a given application remains the sole responsibility of the user.

Cataloging-in-Publication Data is on file with the Library of Congress

All rights reserved. No part of this book may be reproduced or transmitted in any form or by any means, electronic or mechanical, including photocopying or by any information storage and retrieval system, without permission in writing from the publisher.

© Carl Hanser Verlag, Munich 2018
Editor: Dr. Julia Diaz Luque
Production Management: Jörg Strohbach
Coverconcept: Marc Müller-Bremer, www.rebranding.de, München
Coverdesign: Stephan Rönigk
Typesetting: Kösel Media GmbH, Krugzell
Printed and bound by Hubert & Co GmbH, Göttingen
Printed in Germany

ISBN: 978-1-56990-672-9
E-Book ISBN: 978-1-56990-673-6

Preface

After 50 years of experience in plastics processing, designing, and manufacturing of tools and equipment, in the mid-1990s I got involved in the development of a business for the design and manufacturing of plastics extrusion dies. To develop the business, I needed to convince my customers, with a good reason, that my approach was different to that of anybody else. With this in mind, I searched a lot of literature. I found that there is a lot about the theory of the flow characteristics of molten plastics through the die channels, but there are not any solved examples of the die design. Some of the formulae and equations given in the literature are so complex that most of the practical engineers would find it difficult to solve these equations.

In the computation of the melt flow characteristics through the die channel, there are several influencing factors, such as the rheology data and the thermodynamic properties of the materials involved. Coupled with them are the die geometry and the processing conditions, such as the output requirements and the temperature variations in the melt as well as in the die. The derivatives of these are the pressure loss through the die channel, the velocity profile, the shear rate, the shear stress, etc. Commercially available computer software takes all the hard work of computation from the die design engineers. With the use of such software, die designers can design a die that is fit for its purpose, in terms of materials being used and outputs required for the given sizes of the products.

In this book, I have used the computer simulation software named "Virtual Extrusion Laboratory™, Polymer Processing Simulation Software" by Compuplast International, Inc. Most of the dies given in the book are based on the spiral type of distributor and the reason for using such distributor is also explained in detail. All the dies illustrated in the book have been simulated with the aforesaid software, and the results of the simulations are also given as a guide for the design of other similar dies.

The range of dies covered in the book is monolayer and multilayer tubes and pipes from ⌀ 1 mm to ⌀ 315 mm. Larger or smaller sizes can be designed on the same principles. In the last chapter, the choice of commonly used steels for the manufac-

ture of dies is also discussed. Most of the solved examples of the dies given in this book are used in the manufacturing of specific products and are well proven. The above-mentioned software has been used as a tool for the simulation of the melt flow variables in the dies.

This book has been written as a practical guide for engineers and designers associated with the extrusion processes of polymers for the manufacture of plastic tubes and pipes. As the calculations of the melt flow through the dies are very complex and time consuming, the use of simulation software is highly recommended.

Finally, I thank Dr. Mark Smith and Dr. Julia Diaz-Luque of Hanser for their help and support in the publication of this book.

Sushil Kainth, MBA, B. Sc., CEng, MIET.

About the Author

While studying part time at Gosta Green College of Advanced Technology (now Aston University), Birmingham, UK, Sushil Kainth was working full time in industry. By the time he qualified as a B.Sc. in Production Engineering in 1967, he had five years' experience as a Production Engineer (Injection Molding) in the plastics division of Joseph Lucas Industries in Birmingham. In 1973, he set up his own plastics extrusion company in India for the manufacture of plastic pipes for water, for industrial and domestic use.

In India there were many problems for the industry, such as short supply of plastics polymers, and shortage of electricity for the industry, coupled with bribery and corruption at every walk of life; he decided to dispose of the operation and return to the UK in 1978. After working as a project engineer for a short time, he was appointed Technical Manager of a large plastics injection molding operation. Here he developed the process for manufacturing kitchen sinks from the material known as Asterite. This process was started based on 0.5% of the UK market, and during the 1980s it grew to 55% of the market.

In 1989, he set up his own company to manufacture high-quality cultured marble products and this business was eventually taken over by a large international company, which appointed him Technical Director of three companies. In 1995, he started the business of plastic extrusion die manufacturing in partnership with another well-established machine shop. Since then, he has designed and manufactured over 500 dies and tools for industries varying from medical tubing to water, gas, and petroleum pipes. Coextrusion dies have been his specialty for the last 20 years.

His approach to the design and manufacture has been to solve production problems at the design stage using computer aided techniques for the design and simulation of flow of plastics through the dies. As a result, the dies, which he has designed, manufactured, and supplied to many customers around the world, work

the first time without having to waste a lot of valuable production resources in trialling and proving the dies.

The author is a member of the Institute of Engineering and Technology and takes active part in the activities of Aston University in Birmingham.

Contents

Preface ..... **V**

About the Author ..... **VII**

1 Die Design: Basic Considerations **1**

1.1 Die Definition and Purpose 1

1.2 A Spider Supported Die Head 3
- 1.2.1 Flange Adapter 3
- 1.2.2 Spider Cone or Torpedo 4
- 1.2.3 Spider 5
- 1.2.4 Connecting Mandrel 6
- 1.2.5 Connecting Ring 7
- 1.2.6 Die Clamp or Die-Adjusting Ring 7
- 1.2.7 Die or Bush 8
- 1.2.8 Pin or Mandrel 9

2 Project Planning **11**

2.1 Data Collection 11
- 2.1.1 Product 12
- 2.1.2 Product Range 13
- 2.1.3 Wall Thickness 14

2.2 Material 14
- 2.2.1 Rheology Data 15
- 2.2.2 Thermodynamic Properties 17

2.3 Equipment 18
- 2.3.1 Extruder 19
- 2.3.2 Calibrator 19
- 2.3.3 Cooling Bath 19
- 2.3.4 Haul-off 19

2.3.5 Cutter 19
2.3.6 Winder 20
2.4 Summary of Design Brief 20

3 Design of a Simple Die 23

3.1 Design Brief 23
3.2 Design of Pin and Die Bush 24
3.2.1 Draw Down Ratio 25
3.2.2 Draw Down Ratio Balance 27
3.2.3 Die Land 28
3.2.4 Convergent Section 29
3.3 Relaxation Chamber 31
3.4 Spider 33
3.5 Cone or Torpedo 37
3.6 Flange Adapter 38
3.7 Die Clamp Plate 39
3.8 Screw Fixings 39
3.9 Heating of Die 41
3.10 Detailed Drawings 42
3.10.1 Die Bush 42
3.10.2 Pin 43
3.10.3 Clamp Plate 44
3.10.4 Connecting Ring 45
3.10.5 Connecting Mandrel 45
3.10.6 Spider 46
3.10.7 Torpedo or Cone 47
3.10.8 Flange Adapter 48
3.11 References 49

4 Simulation of Melt Flow 51

4.1 Experimental Approach 51
4.2 Mathematical Calculations of the Flow Characteristics 52
4.3 Computer Simulation 59
4.4 References 64

5 Spiral Die ... 65

5.1 Operating Principle ... 66

5.2 Design of Spiral Die ... 69
5.2.1 Die Body Geometry ... 70
5.2.2 Spiral Mandrel Geometry ... 71
5.2.3 The Spiral Geometry ... 73

5.3 Material Information ... 76

5.4 Die Simulation ... 76
5.4.1 Body Geometry ... 77
5.4.2 Mandrel Geometry ... 77
5.4.3 Channel Geometry ... 78
5.4.4 Feed Section ... 79
5.4.5 Section above the Spirals ... 80
5.4.6 Material Information ... 82
5.4.7 Processing Conditions ... 83
5.4.8 Checking Parameters ... 84
5.4.9 Simulation Results ... 84
5.4.9.1 Feed Section ... 84
5.4.9.2 Spiral Section ... 85
5.4.9.2.1 Pressure Drop ... 85
5.4.9.2.2 Shear Rate ... 86
5.4.9.2.3 Shear Stress ... 89
5.4.9.2.4 Temperature Variation ... 91
5.4.9.2.5 Flow Balance ... 91
5.4.9.2.6 Flow Variation ... 92
5.4.9.2.7 Fine Tuning ... 93
5.4.9.3 Simulation of Tooling Section ... 95
5.4.9.3.1 Pressure Drop ... 95
5.4.9.3.2 Shear Rate ... 96
5.4.9.3.3 Shear Stress ... 96
5.4.9.3.4 Temperature Variation ... 97
5.4.10 Changes to Die for ⌀20 mm Tubes ... 98
5.4.11 Different Materials ... 101
5.4.11.1 HDPE ... 101
5.4.11.2 Polypropylene ... 103
5.4.11.3 PA12 ... 104
5.4.11.4 PU ... 105
5.4.12 Summary of Die Specifications and Characteristics ... 106

6 Monolayer Die for Tubes ⌀1 mm to ⌀6 mm 107

6.1 ⌀1 mm to ⌀6 mm Fixed Center in Line Die 107
6.1.1 Design Brief 107
6.1.2 Draw Down Ratios and Tooling Sizes 109
6.1.3 Design Procedure 109
6.1.4 Die Simulation (⌀2 mm Tube) 112
6.1.4.1 Die Geometry 112
6.1.4.1.1 Feed Section 112
6.1.4.1.2 Distribution Section 113
6.1.4.1.3 Annuli or Tooling Section 115
6.1.4.2 Project Definition 116
6.1.4.2.1 Material Information 116
6.1.4.2.2 Processing Conditions 116
6.1.4.3 Simulation Results 117
6.1.4.3.1 Feed Section 117
6.1.4.3.2 Distribution Section or Spiral Mandrel Part ... 117
6.1.4.3.3 Tooling Section (Annuli) 118
6.1.4.3.4 Correction of Tooling Section 119
6.1.5 Die Simulation (⌀6 mm Tube) 121
6.1.5.1 Die Geometry 121
6.1.5.1.1 Dimensions of Feed Section 121
6.1.5.1.2 Dimensions of Distribution Section 121
6.1.5.1.3 Dimensions of Tooling Section 121
6.1.5.2 Project Definition 122
6.1.5.2.1 Material Information 122
6.1.5.2.2 Processing Conditions 122
6.1.5.3 Simulation Results 122
6.1.5.3.1 Feed Section 122
6.1.5.3.2 Distribution Section or Spiral Mandrel Part ... 123
6.1.5.3.3 Tooling Section (Annuli) 124

7 Monolayer Die for Tubes ⌀4 mm to ⌀16 mm 127

7.1 Initial Die Design 129
7.1.1 Feed Section 131
7.1.2 Distribution or Spiral Mandrel Section 132
7.1.3 Annuli or Tooling Section 133
7.2 Project Definition 135
7.2.1 Material Information 135
7.2.2 Processing Conditions 135

7.3 Simulation Results 136
7.3.1 Feed Section 136
7.3.2 Distribution Section or Spiral Mandrel 137
7.3.3 Sections Past the Mandrel 139
7.4 ø4.00 mm Tube Die 139
7.4.1 Feed Section 141
7.4.2 Distribution Section or Spiral Mandrel 141
7.4.3 Sections Past the Mandrel 142
7.5 Other Materials 143
7.5.1 LDPE 143
7.5.1.1 Simulation Results of ø16 mm Tube Die 143
7.5.1.1.1 Feed Section 144
7.5.1.1.2 Distribution Section or Spiral Mandrel 144
7.5.1.1.3 Sections Past the Mandrel 144
7.5.1.2 Simulation Results of ø4 mm Tube Die 145
7.5.1.2.1 Feed Section 145
7.5.1.2.2 Distribution Section or Spiral Mandrel 145
7.5.1.2.3 Sections Past the Mandrel 146
7.5.2 HDPE 147
7.5.2.1 Simulation Results of ø16 mm Tube Die 147
7.5.2.1.1 Feed Section 147
7.5.2.1.2 Distribution Section or Spiral Mandrel 147
7.5.2.1.3 Sections Past the Mandrel 148
7.5.2.2 Simulation Results of ø4 mm Tube Die 148
7.5.2.2.1 Feed Section 149
7.5.2.2.2 Distribution Section or Spiral Mandrel 149
7.5.2.2.3 Sections Past the Mandrel 149
7.5.3 Nylon 12 150
7.5.3.1 Simulation Results of ø16 mm Tube Die 151
7.5.3.1.1 Feed Section 151
7.5.3.1.2 Distribution Section or Spiral Mandrel 151
7.5.3.1.3 Sections Past the Mandrel 152
7.5.3.2 Simulation Results of ø4 mm Tube Die 152
7.5.3.2.1 Feed Section 152
7.5.3.2.2 Distribution Section or Spiral Mandrel 153
7.5.3.2.3 Sections Past the Mandrel 153
7.5.4 Flexible PVC 154
7.5.4.1 Simulation Results of ø16 mm Tube Die 154
7.5.4.1.1 Typical Flexible PVC (Power Law) 154
7.5.4.1.2 Typical Flexible PVC (Power Law) – Slip 155
7.5.4.1.3 Hydro Polymers' Own Grade 155

7.5.4.1.4 Hydro Polymers XH76214 156
7.5.4.1.5 Rehau 8426 156
7.5.4.2 Simulation Results of Ø16 mm Tube Die 157
7.5.4.2.1 Feed Section 157
7.5.4.2.2 Distribution Section or Spiral Mandrel 158
7.5.4.2.3 Sections Past the Mandrel 158
7.5.4.3 Simulation Results of Ø4 mm Tube Die 159
7.5.4.3.1 Feed Section 159
7.5.4.3.2 Distribution Section or Spiral Mandrel 159
7.5.4.3.3 Sections Past the Mandrel 160

8 Monolayer Die for Pipes Ø50 mm to Ø125 mm 161

8.1 Design Brief 161
8.2 Calculations of Draw Down Ratios for Tool Sizes 163
8.3 Initial Die Design 165
8.4 Die Geometry 168
8.4.1 Feed Section 168
8.4.2 Distribution or Spiral Mandrel Section 169
8.4.3 Section above the Spiral Mandrel 170
8.4.3.1 Ø125 mm × 17 SDR 170
8.4.3.2 Ø125 mm × 11 SDR 172
8.4.3.3 Ø50 mm × 17 SDR 173
8.4.3.4 Ø50 mm × 11 SDR 174
8.5 Project Definition 175
8.5.1 Material Information 175
8.5.2 Processing Conditions 176
8.6 Simulation Results 177
8.6.1 Simulation Results of Ø125 mm × 17 SDR Die 177
8.6.1.1 Feed Section 177
8.6.1.2 Distribution Section or Spiral Mandrel 178
8.6.1.3 Sections Past the Spirals 180
8.6.2 Simulation Results of Ø125 mm × 11 SDR Die 181
8.6.2.1 Feed Section 181
8.6.2.2 Distribution Section or Spiral Mandrel 182
8.6.2.3 Sections Past the Spirals 182
8.6.3 Simulation Results of Ø50 mm × 17 SDR Die 183
8.6.3.1 Feed Section 184
8.6.3.2 Distribution Section or Spiral Mandrel 184
8.6.3.3 Sections Past the Spirals 185

8.6.4 Simulation Results of Ø50 mm × 11 SDR Die 186
8.6.4.1 Feed Section 186
8.6.4.2 Distribution Section or Spiral Mandrel 187
8.6.4.3 Sections Past the Spirals 188
8.6.5 Simulation Results of Other Sizes in the Pipe Range 188

9 Monolayer Die for Pipes Ø140 mm to Ø315 mm 191

9.1 Design Brief 192
9.2 Calculations of Draw Down Ratios for Tooling Sizes 193
9.3 Initial Die Design 194
9.4 Die Geometry 196
9.4.1 Feed Section 196
9.4.2 Distributor or Spiral Mandrel Section 197
9.4.3 Section above the Spirals 199
9.4.3.1 Ø315 mm × 26 SDR 199
9.4.3.2 Ø315 mm × 17 SDR 201
9.4.3.3 Ø250 mm × 17 SDR 202
9.4.3.4 Ø140 mm × 17 SDR 202
9.4.3.5 Ø225 mm × 11 SDR 203
9.4.3.6 Ø140 mm × 11 SDR 204
9.5 Project Definition 206
9.5.1 Material Information 206
9.5.2 Processing Conditions 206
9.6 Simulation 206
9.6.1 Simulation Results of Ø315 mm × 26 SDR Die 206
9.6.1.1 Feed Section 207
9.6.1.2 Distribution Section or Spiral Mandrel 208
9.6.1.3 Section Past the Spirals or Tooling Section 212
9.6.2 Simulation Results of Ø315 mm × 17 SDR Die 213
9.6.2.1 Feed Section 213
9.6.2.2 Distribution Section or Spiral Mandrel 213
9.6.2.3 Section Past the Spirals or Tooling Section 214
9.6.3 Simulation Results of Ø250 mm × 17 SDR Die 214
9.6.3.1 Feed Section 215
9.6.3.2 Distribution Section or Spiral Mandrel 215
9.6.3.3 Section Past the Spirals or Tooling Section 215
9.6.4 Simulation Results of Ø140 mm × 17 SDR Die 216
9.6.4.1 Feed Section 216
9.6.4.2 Distribution Section or Spiral Mandrel 216
9.6.4.3 Section Past the Spirals or Tooling Section 217

9.6.5 Simulation Results of ⌀225 mm × 11 SDR Die 217
9.6.5.1 Feed Section 217
9.6.5.2 Distribution Section or Spiral Mandrel 218
9.6.5.3 Section Past the Spirals or Tooling Section 218
9.6.6 Simulation Results of ⌀140 mm × 11 SDR Die 219
9.6.6.1 Feed Section 219
9.6.6.2 Distribution Section or Spiral Mandrel 219
9.6.6.3 Section Past the Spirals or Tooling Section 220

10 Coextrusion Pipe Dies 223

10.1 Extruded Separately and Then Combined 223

10.2 Extruded Together from One Die 225
10.2.1 Simulation of 2-Layer Interface 227
10.2.1.1 Velocity 228
10.2.1.1.1 Overall Velocity Profile 228
10.2.1.1.2 Velocity Profile near the Joining of Two Melt Streams 228
10.2.1.2 Pressure Drop 231
10.2.1.3 Temperature 233
10.2.1.4 Shear Stress 234

11 Coextrusion Die (⌀5.00 mm to ⌀16.00 mm) 237

11.1 Design Brief 237

11.2 Product Sizes and Tooling Sizes 238

11.3 Output Calculations for Different Tube Sizes 240

11.4 Design of 2-Layer Plus Striping Die for Micro-Duct ⌀5.00 mm to ⌀16.00 mm 242
11.4.1 Tooling Section 242
11.4.2 Distributor Sections 243
11.4.2.1 Outside Layer Distributor 243
11.4.2.1.1 Outside Layer Die Geometry for Simulation 244
11.4.2.1.2 Body, Mandrel, and Spirals Dimensions for Simulation 245
11.4.2.1.3 Dimensions of Tooling Part from the End of Spiral to the Die End 246
11.4.2.1.4 Feed Section 246
11.4.2.1.5 Balancing of Flow through Ports to Spirals 246
11.4.2.1.6 Processing Conditions for Outer Layer 248
11.4.2.2 Inside Layer Distributor 248
11.4.2.2.1 Dimensions of Inside Layer Mandrel 250

11.4.2.2.2 Dimensions of Section above the Spirals to Pin and Die 251
11.4.2.2.3 Feed Section 251
11.4.2.2.4 Flow from Ring to Spirals 251
11.4.2.2.5 Processing Conditions 252
11.4.2.2.6 Flow Variables 252
11.5 Striping 253
11.6 Calculation of Number of Bolts Required for Die Head 256
11.7 Heating of Extrusion Dies 260

12 Coextrusion Three-Layer Die (∅20.00 mm to ∅65.00 mm) 263

12.1 Design Brief 263
12.2 Product and Tooling Sizes 264
12.3 Output Calculations for Different Pipe Sizes 266
12.4 Design of 3-Layer Pipe Die for Pipes of ∅20 mm to ∅65 mm 268
12.4.1 Tooling Section 268
12.4.2 Distribution Section 271
12.4.2.1 Outside Layer Distributor 271
12.4.2.2 Dimensions of Body, Mandrel, and Spirals 274
12.4.2.3 Dimensions of the Part Past the Spirals 275
12.4.2.4 Feed Section 276
12.4.2.5 Balancing of Flow through Ports to Channels 278
12.4.2.6 Processing Conditions for Outer Layer 279
12.4.2.7 Melt Variables Noted from the Software 279
12.4.3 Design of Second Layer (Middle Layer) 280
12.4.3.1 Second Layer Distributor 280
12.4.3.1.1 Distribution Section 282
12.4.3.1.2 Dimensions of Body, Mandrel, and Spirals of Layer 2 283
12.4.3.1.3 Dimensions of Section above the Spirals of Second Layer 285
12.4.3.1.4 Feed Section 285
12.4.3.1.5 Dimensions of the Feed Ports of Middle Layer 287
12.4.3.1.6 Processing Conditions for Middle Layer 288
12.4.3.1.7 Melt Variables Noted from the Software 288
12.4.4 Design of Third Layer (Inside Layer) 289
12.4.4.1 Third Layer Distributor 289
12.4.4.1.1 Dimensions of Body, Mandrel, and Spirals of Layer 3 292

12.4.4.1.2 Dimensions of Section above the Spirals of Third Layer . . . 293
12.4.4.1.3 Feed Section . . . 293
12.4.4.1.4 Processing Conditions for Inside Layer . . . 294
12.4.4.1.5 Important Melt Variables Obtained from the Software for the Inside Layer of the Die . . . 295

13 Three-Layer-Plus-Striping Die for ∅25 mm to ∅110 mm Pipes . . 297

13.1 Design Brief . . . 298
13.2 Product and Tooling Sizes . . . 298
13.3 Output Calculations for Different Pipe Sizes . . . 300
13.4 Design of 3-Layer Die Head for Pipes ∅25 mm to ∅110 mm . . . 302
13.4.1 Tooling Section . . . 302
13.4.2 Body and Main Layer Mandrel . . . 304
13.4.3 Middle Layer Mandrel . . . 307
13.4.4 Inside Layer Mandrel . . . 309
13.4.5 Mandrel Extension . . . 311
13.4.6 Complete Die . . . 313
13.5 Die Simulation . . . 314
13.5.1 Geometry for Simulation of Main Layer . . . 315
13.5.1.1 Dimensions of Feed Section . . . 316
13.5.1.2 Dimensions of Body, Mandrel, and Spirals . . . 316
13.5.1.3 Dimensions of the Die Part Past the Spirals . . . 317
13.5.1.4 Feed Balancing . . . 317
13.5.2 Processing Conditions . . . 320
13.5.3 Melt Variables Taken from Software . . . 321
13.5.4 Second Layer . . . 322
13.5.4.1 Geometry for Simulation . . . 322
13.5.4.1.1 Feed Section . . . 322
13.5.4.1.2 Distribution Section . . . 323
13.5.4.1.3 Section above the Spirals . . . 324
13.5.4.2 Processing Conditions . . . 324
13.5.4.3 Melt Variables Taken from Simulation . . . 325
13.5.4.3.1 Feed Section . . . 325
13.5.4.3.2 Distribution Section . . . 325
13.5.4.3.3 Section above the Spirals . . . 325
13.5.5 Third or Inside Layer . . . 326
13.5.5.1 Inside Layer Geometry . . . 327
13.5.5.1.1 Feed Section . . . 327
13.5.5.1.2 Body, Mandrel, and Spirals . . . 327

13.5.5.1.3 Section above the Spirals 328
13.5.5.2 Processing Conditions 328
13.5.5.3 Simulation Results 329
13.6 Flow Balancing of Three Layers 329

14 Materials for Extrusion Dies 331

14.1 Nitrided Steels 332
14.2 Fully Hardened Steels 333
14.2.1 1.2344 (H13) Steel 334
14.2.2 1.2767 (EN30B) Steel 334
14.2.3 1.2316 Steel 334
14.3 Quenched and Tempered Steels 335
14.3.1 1.2311 (P20) Steel 335
14.3.2 1.2312 (P20+S) Steel 336
14.3.3 1.2738 (P20+Ni) Steel 336
14.4 Speciality Steels 336
14.4.1 1.2316 Steel 337
14.4.2 1.2083 Steel 337
14.4.3 Stainless Steel 337
14.4.3.1 1.4462 Steel 337
14.4.3.2 UDDOHOLM STAVAX® ESR 338
14.4.4 Other Metals 338
14.4.4.1 Hastelloy® 339
14.4.4.2 Inconel® 339
14.4.4.3 Tungsten Carbide 340
14.4.5 Corrosion Resistant Plating 340
14.5 References 340

Index 341

1 Die Design: Basic Considerations

1.1 Die Definition and Purpose

In the extrusion process, the extrusion die, sometimes known as extruder head, is an essential piece of equipment for the production of the desired product. In the extrusion line, it is the die that takes the plastic melt from the extruder and shapes it into the finished or semi-finished product. The product can be tubes, pipes, rods, profiles, coated wires, cables, filaments, film, or sheet. Whatever the product may be, the purpose of the die is to shape the plastic melt into a desired form.

The purpose of the extruder to which the die is attached is to plasticize the granules (or powder, in some cases) of plastic into a homogeneous melt. The melt is pushed through the die to roughly the desired shape. The final finished product shape is formed by the downstream equipment, which consists of calibration, cooling, haul-off, and cutting equipment. In many instances, the same extruder and downstream equipment can be used for multiple products as long as the equipment has the capacity to produce the products. For instance, the extruder which makes pipes can be used for wire and cable coating, profiles, film, and sheet extrusion.

For every type of product mentioned above, a special die is required. A die which makes tubes of certain sizes will not be suitable for pipes of larger sizes. The terms “tube” and “pipe” are synonymous, with the difference being that any round and hollow section below 25 mm in diameter is known as tube and any above 25 mm in diameter is known as pipe. This definition of tube and pipe is not always followed, as hose pipes of 19 mm in diameter are not normally called hose tubes and conduit pipes of similar sizes are also not called conduit tubes. Nevertheless, the die which makes 20 mm tubes can make 30–35 mm pipes in some cases, but may not be suitable for 50 mm or greater diameters because of the differences in the geometry of the die, as is shown in Chapter 3.

Hence, for every type of product there has to be a special die. For this reason, there are tube dies, pipe dies, profile dies, film dies, sheet dies, etc. For each type of die design there are several different design aspects to be considered. Here the design

aspects of tubes and pipes will be discussed in detail. Within the scope of designing these dies, monolayer and multilayer dies will also be explained.

Monolayer pipes and tubes are normally extruded through in-line (longitudinal) dies, and in special cases side-fed dies are used. Multilayer pipes and tubes are extruded through a combination of both in-line feed and side feed. Side-fed dies are called crosshead dies. Crosshead dies are also used when the products to be covered are fed through the middle of the die—for example, wire coating, cable covering, filament coating, pipe coating, etc.

The design aspects of some parts of different types of dies can be the same or similar and others can be quite different. A simple type of tube or pipe die is taken here to explain these differences, principles of design, and definition of the parts. This discussion can be extended to more complicated monolayer, multilayer, and crosshead dies.

A simple die with which most extrusion engineers are familiar is a mandrel support annular die, also known as a spider support die or simply a spider die, as shown in Figure 1.1.

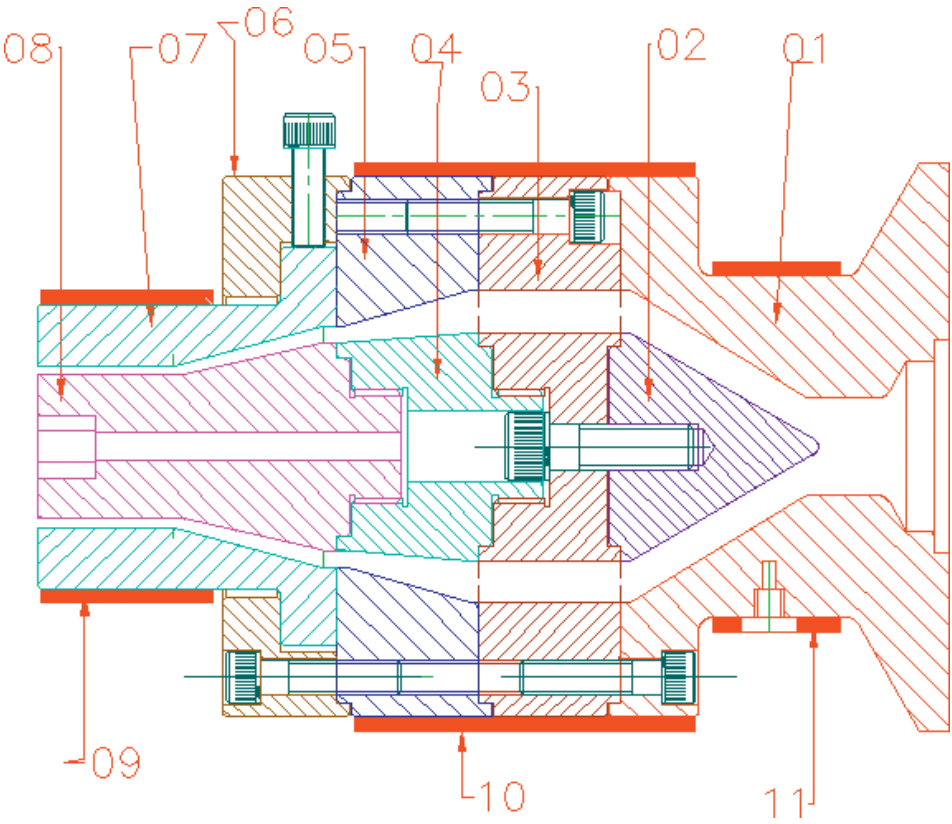

Figure 1.1 Spider die for pipes

1.2 A Spider Supported Die Head

There are several names for this type of die, such as mandrel support die, ring support die, spider supported die, or spider die. The latter is the most commonly used term in the industry and will be employed here throughout this discussion.

This type of die is normally used for extruding PVC or similar types of thermally unstable materials. For other materials that are not so heat sensitive, such as polyolefins (LDPE, HDPE, and PP), polyamides, and many more, a spiral type of distribution is recommended because of its superiority in homogenizing the flow of plastic melt in the die head, as shown in Chapter 5.

In a spider die, a melt stream of plastic from the extruder enters the die head through the breaker plate or connecting ring (not shown in Figure 1.1) into a round channel. The spider cone or torpedo spreads the melt into an annular shape, as shown in Figure 1.1, before it is divided into several sections by the spider legs. Then, these melt sections are joined together by the converging angles of the connecting mandrel (04), the connecting ring (05), the die bush (07), and the mandrel (08). Finally, the melt is forced through a parallel annulus (more commonly known as a die land) between the mandrel and the die.

The term “die head” is used for the complete unit to distinguish it from the die or, as sometimes referred to, the bush. The die or bush is a part of the die head that forms the outside shape of the product to be extruded. To avoid any confusion, the term “die” will be used for the part 07 of the die head and “pin” for the mandrel (08).

The names of the die head parts used here are commonly known in the extrusion industry, and almost everybody involved in plastics processing is familiar with the function of these parts. Nevertheless, a brief description of these parts is given here, and more details are given in Chapter 3.

1.2.1 Flange Adapter

The flange adapter (01 in Figure 1.1) is sometimes known as flange connection and, as the name implies, on one side this part forms a connection to the extruder flange. On the other side it is attached to the spider, which holds the whole die head together. At the extruder end there is a recess to locate on the breaker plate or connecting ring.

The flange part is identical to the extruder flange and both the extruder flange and the flange adapter are clamped together with a clamp not shown in Figure 1.1. The melt from the extruder enters into the flange adapter from the breaker plate in the

form of strands, which are joined together into a round slug. In the case of a spider die head, the slug of melt is spread around the spider cone or torpedo, as shown in Figure 1.1.

The flange adapter normally has a heater and a thermocouple probe fitted to control the temperature of the material in this region. In some cases, a pressure transducer to monitor the pressure in the die head is also incorporated in this part. The design of the flange adapter varies with the design of the other parts of the die and the geometry of the extruder flange to which it is fitted, as can be seen in Chapter 3 and Chapters 5 to 13.

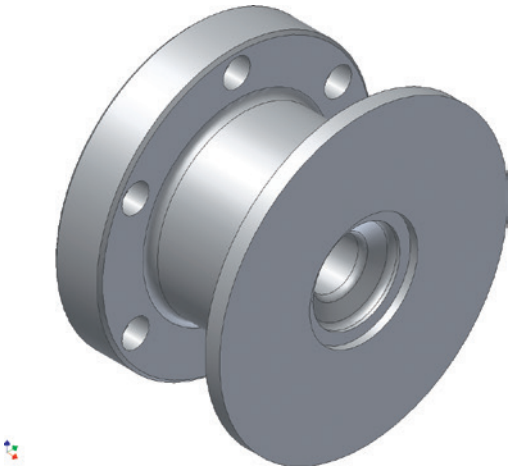

Figure 1.2 Flange adapter

1.2.2 Spider Cone or Torpedo

The spider cone or torpedo (02 in Figure 1.1) is a conical part attached to the inner section of the spider. It is used for dividing the flow of melt from a round slug to an annulus form, which is pushed through the spider channels. The design of this part is discussed in Chapter 3.

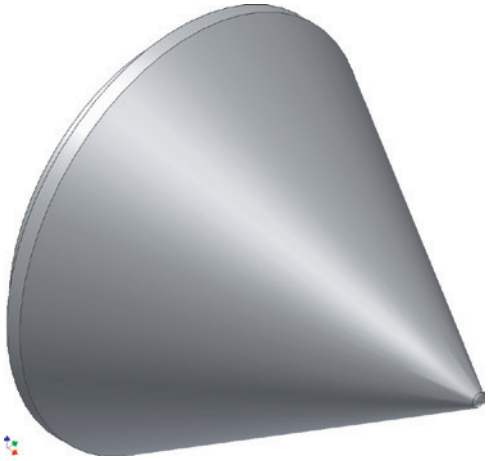

Figure 1.3 Torpedo

1.2.3 Spider

The spider (03 in Figure 1.1) is the heart of this type of die head. It is a bridge between the flange adapter and the connecting ring on the outside, and the torpedo and the mandrel or pin on the inside. More importantly, it divides the melt stream into channels around the spider legs. The melt is again joined by the compression in the connecting ring and the mandrel or pin. The inside and outside annular parts of the spider are kept together by the spider legs, the number of which varies between four and eight depending on the size of the die head. The gap between the outer ring and the inner section—in other words, the channel height—is designed to suit the output required, considering ease of manufacturing and a minimum residence time for the melt. A narrow channel increases the pressure in the die head and is difficult to machine and polish. On the other hand, a large section height increases the residence time and reduces the shear rate, resulting in degradation of the heat sensitive materials in this region. The shape of the spider legs is designed to divide the flow of melt stream and to make it join easily in the chamber between the connecting ring and the pin, as shown in Figure 1.4.

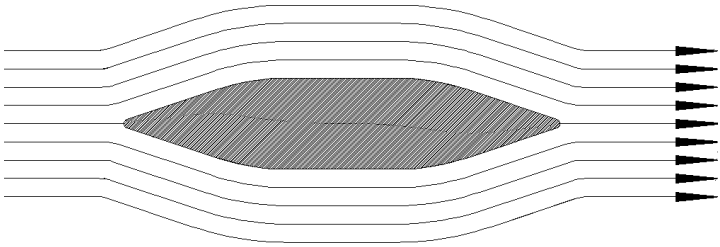

Figure 1.4 Section through spider leg

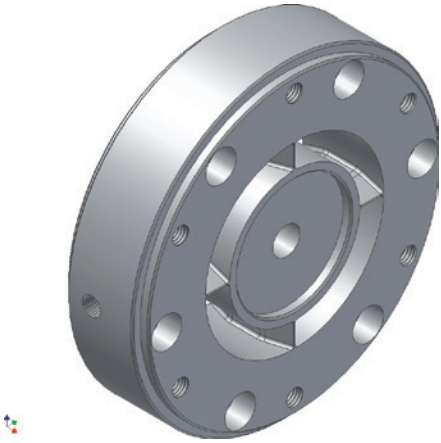

Figure 1.5 Spider

1.2.4 Connecting Mandrel

The connecting mandrel (04 in Figure 1.1) is connected to the inner section of the spider on one end and the pin is connected to it on the other end. The shape and dimensions of this part are dependent upon the shape and dimensions of the other adjoining parts, namely, the inside section of the spider and the diameter of the pin. The lengths of the connecting mandrel and of the corresponding connecting ring are designed to suit the characteristics of the material. These days, a spider die head is very rarely used for processing polyolefin materials like polyethylene and polypropylene. However, there are instances when, for very short runs and for economic reasons, a spider die head is used for processing these materials. In these instances, the lengths of the connecting mandrel and of the connecting ring are made considerably greater, to diffuse the melt disturbance caused by the spider legs and to minimize the flow lines.

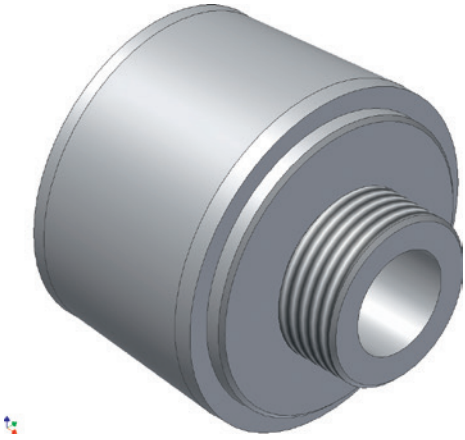

Figure 1.6 Connecting mandrel

1.2.5 Connecting Ring

The connecting ring (05 in Figure 1.1) is an intermediary part between the spider and the die. In conjunction with the connecting mandrel (04), it is used for streamlining the melt coming out of the spider, and for guiding it to the entry of the die. The design of this part is quite simple, as the inside diameters should match the diameter of the spider on one hand and the inside diameter of the die on the other. The outside diameter corresponds with the outside diameter of the spider body and of the die-adjusting ring on the other side. In some instances, the connecting ring incorporates another part called the choke ring. The choke ring was considered to be an essential part of the design when the flow of material had to be adjusted by a trial and error method. The incorporation of the choke ring in the connecting ring is a good idea and gives the design flexibility for making certain changes; it can also be replaced with a striping ring, when different color stripes are required on the product.

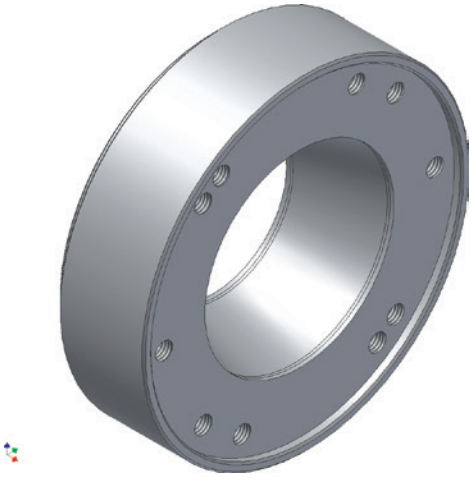

Figure 1.7 Connecting ring

1.2.6 Die Clamp or Die-Adjusting Ring

This part (06 in Figure 1.1) clamps the die (07) and the connecting ring (05) together and is also used for adjusting the radial gap between the mandrel and the die, as illustrated in Figure 1.1. The number of bolts connecting the die-adjusting ring to the connecting ring varies according to the size of the die head. The number of adjusting bolts on the circumference also varies according to the size of the die head. Some designers prefer to incorporate the die-adjusting function of the die clamp into the main body of the die head and to replace this component with a simple clamp plate. The disadvantage of this system is that, if there is any wear or

damage around the die-adjusting bolts, the repair or replacement of the die body is more expensive than the replacement of the die-adjusting ring.

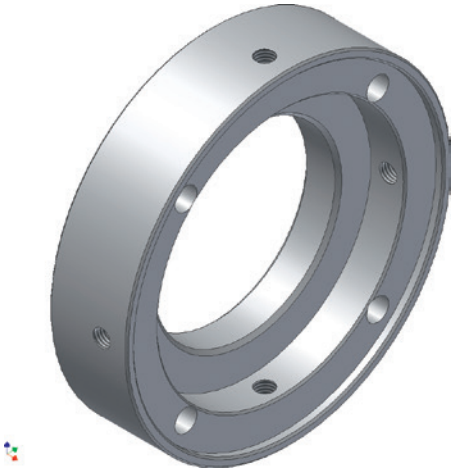

Figure 1.8 Die clamp ring

1.2.7 Die or Bush

This part (07 in Figure 1.1) of the die forms the outer shape of the pipe or tube. In other types of products, such as profiles and cable covering, the same part produces the desired outer shape of the finished product. The two sections of the inside of the die are the die land and the converging section. The converging section guides the melt from the die connecting part or spider to the land section. The land section bears direct relationship to the final shape. This part of the die head is heated by external heaters to control the temperature of the melt in this region. The detailed design of the die or bush is given in Chapter 3.

Figure 1.9 Die bush

1.2.8 Pin or Mandrel

This part (08 in Figure 1.1) of the die head forms the inside diameter of pipes and tubes. In other types of products, such as cable covering and profiles, the same part determines the inside perimeters of those products. As the discussion here is about pipe and tubes, the shape concerned is round and the dimensions of this part are related to the inside diameter of the finished product. There are three main sections of the pin: the two sections corresponding to the die are the land and the converging section. The third section is the location of the spigot and the threaded part, which connects the pin to the connecting mandrel. The first two parts corresponding to the die are important in shaping the geometry of the final product. The design aspects of the pin are shown in Chapter 3.

These are the main parts used in the construction of a spider supported die head; any additions or alterations can be made to suit the process or product variations. The purpose of this section was to familiarize the reader with the parts and terminology employed in further discussion.

To start the design of the die is not quite as simple as outlined above. The designer needs to collect a lot of information about the product, the materials to be processed, the equipment installed, and other processing facilities and limitations. Therefore, the next chapter looks into the collection and analysis of the information of all aspects affecting the design of the die head.

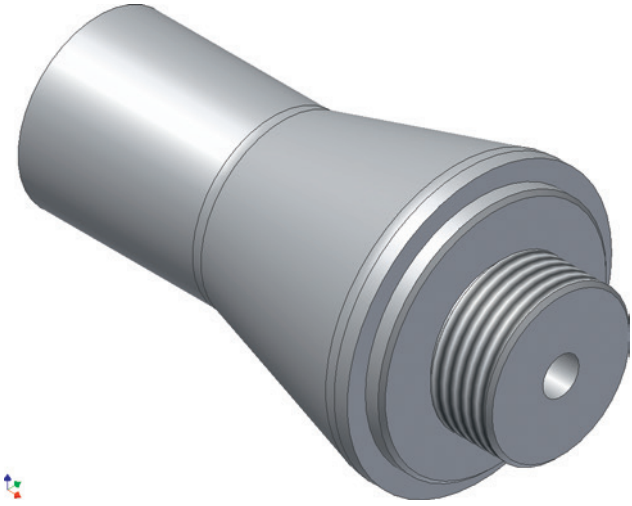

Figure 1.10 Pin or mandrel

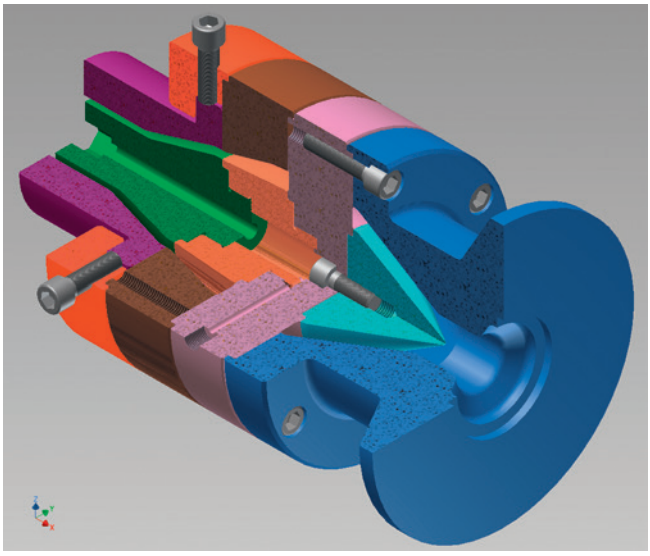

Figure 1.11 Complete spider die in 3D

2 Project Planning

The design of a die head is always a part of a complete project. The project can be a new factory, a new production line, a new product on an existing production line, or just the replacement of an existing die head. Whatever the extent of involvement it may have, the stages of planning a new head from design to a smooth running of production are the same. In many cases, the die designer is part of the team responsible for the complete project and it is the designer's job to collect all the necessary data concerning the project from start to end. The steps involved in this process are as follows:

1. Data collection
2. Rough design
3. Calculation, computation, and simulation of materials flow through the die
4. Finalizing the design and preparing detailed drawing
5. Selection of die materials
6. Defining the manufacturing methods
7. Specifying heat-treatment and surface finish
8. Final assembly procedures and tools
9. Fitting the die on the extruder and trial
10. Troubleshooting and passing it on to production

2.1 Data Collection

Before starting the design of a die head, it is important to have a clear concept of the project, its aims and limitations concerning the product, the material to be used, and the associated equipment. Getting this information can be difficult if one does not know which information is required and where to get it from. Design engineers are not always the decision makers; therefore, it is important that the

design engineer compile a list of questions in the form of a project brief to collect all the necessary information concerning the following related questions:

1. What is to be made—i. e., the product or products?
2. What materials or polymers are to be used for the products to be manufactured?
3. What equipment is to be used—i. e., extruder and downstream?

Thus, the data collection is an investigation of the product or the range of products, types of plastic materials to be used, and the type of equipment and its capabilities.

Figure 2.1 Data collection

2.1.1 Product

A die head is usually made for a specific product or range of similar products, like pipes, tubes, cable covering, wire covering, profiles, rods, etc., which should be defined at this stage. A die head designed for large diameter pipes for water or gas applications cannot be used for wire covering and vice versa. Usually, die heads made for monolayer pipes and tubes are made in-line with the extruder and the downstream equipment. Wire and cable covering heads are designed as cross-heads, where the material is fed from the side, typically 90° to the line. Multilayer pipes and tubes heads can be a combination of in-line and feed at an angle, and in some cases just crossheads, where all extruders are sited at left, right, top, and bottom of the crosshead.

The exception to this rule occurs in the case of prototype products, where the die heads sometimes made for other applications are adopted to produce limited samples of different products. For instance, crossheads designed for cable covering have successfully been used for producing tubes, with limited product quality and production efficiency, but in-line heads cannot be used as coating heads.

Clear product definition will determine the orientation of the die head, the type, and the size of the head. The size of the head is determined from the range of products to be manufactured on the production equipment. So, to proceed with the design of the die head, the product is defined as pipe, tube, wire coating, cable covering, etc.

2.1.2 Product Range

Once the product to be made has been agreed upon, the next stage is to define the range of products that can be made from the given die head. For instance, a head designed to make 100 mm diameter pipes can be used for making pipes of a 50 mm diameter to 125 mm diameter pipes. So, the product range for the given die head is defined as ⌀50–125 mm pipes. The same die head cannot be used for making 10 mm tubes or 200 mm pipes without sacrificing some of its qualities, such as the material residence time in the die head, the shear rate, the shear stress, the pressure drop, compression angles between the pin and die, etc.

If a head designed for ⌀100 mm pipes is used for producing ⌀10 mm tubes, the first problem to be encountered is that there is too much material stagnant in the head, resulting in long residence time, low shear rate, high shear stress in the tooling region, and high pressure in the head due to the small annulus area at the tip of the die. Long residence time and low shear rate can cause degradation of the melt in the head. In the case of low heat stability materials like PVC, the degraded material can start gassing, causing environmental hazards and even damaging the die head. High shear stress in the tooling region will cause melt fracture, resulting in shark skin effect on the product. High pressure in the head will cause the leakage of the melt and, in some cases, will damage the head. For these reasons, it is important to define the product range for which the head is to be designed.

There are a number of design considerations for choosing the product range, such as the geometry of the die head, the melt flow characteristics, the plant capacity, and the economical manufacturing of the die head and tooling. The designer has to make judgements on all these issues to determine a good balance between the influencing factors. These judgements are either based on fundamental calculations or simulation of the flow characteristics.

2.1.3 Wall Thickness

Along with the product range, which refers to minimum and maximum diameters, the wall thicknesses of the components are also needed, especially in the case of tubes, pipes, and cable covering. This information is necessary for calculations of material output, line speed, draw down ratios, and die geometry, as will be seen in the following chapters. In the case of special tubes like medical tubes, microtubes for fiber optics, fiber optics ducting, etc., there are certain industry standards, some of which may be written by certain standards institutes and others may be agreed between the manufacturers and the customers on local, national, and international levels.

In the water and gas industry these standards are defined by the water boards and gas boards in the UK. Water and gas pipes are normally referred to using the Standard Diameter Ratio (SDR), which is the ratio of nominal outside diameter to minimum wall thickness. For instance, a 11 SDR for a 110 mm diameter pipe would give a wall thickness of 10 mm. Two commonly used SDR in the water industry are 11 and 17.

In the case of wire and cable covering, these standards are defined by the relevant institutes and the designer should be aware of them. When there are no standards, the designer should agree with the customer on the minimum and maximum wall thickness for each product in the product range.

2.2 Material

The second important part of the data collection or project brief is the material information. It is wrongly assumed that a die head can be used for processing any number of materials. For example, the design of the die head for easily degradable materials is kept as simple as possible and somewhat similar to the one shown in Figure 1.1 in Chapter 1 (i.e., spider support or mandrel support die head), whereas in the case of polyolefin materials like polyethylene and polypropylene it requires a long relaxation area after the spider to knit the weld lines created by the spider legs. There are times when the weld lines cannot be eliminated to acceptable standards with this type of die head. In this case, different types of distributors in the die head are considered.

It is usually a good design practice to design the die head for as many materials as possible, but there are limitations due to the rheological and thermodynamic properties of the materials. A single layer product may be made from a number of materials for specific applications using the same die head. Multilayer products,

however, have different combinations of specific materials and therefore may require different die heads for each set of materials.

Basic information about materials is classified as PVC, LDPE, HDPE, polypropylene, polyamide, polystyrene, etc. Within each class of material, there are several different grades with varying properties, which can have a significant influence on the design of the die head.

Among the material properties there are physical properties dealing with specific gravity, water absorption, and dielectric strength, normally given in the material manufacturers' literature along with mechanical properties such as tensile strength, elongation, tensile yield, compression strength, flexural strength, various moduli, and hardness. Some processing properties such as melting temperature, processing temperature range, compression ratio, and linear shrinkage are also specified. Thermal properties like the coefficient of linear thermal expansion, deflection temperature, and thermal conductivity can also be obtained from the material manufacturers' literature.

Beside these, there are various chemical properties that are considered at the product design stage. It is for the product designer to take into account all these properties to ensure that the product will perform for the purpose it will be manufactured. The product designer may determine the suitable properties either from the manufacturers' literature or in some cases with direct involvement of the material manufacturers or their suppliers. Usually, material manufacturers are large multinational companies with huge research and development facilities and they are continuously developing new materials for specific applications.

Die designers are more interested in the rheological and thermodynamic properties of the materials for the calculations or simulation of the flow of melt through the die and its effect. Both rheological and thermodynamic properties are linked to each other.

2.2.1 Rheology Data

Rheology is the scientific study of fluid flow; the critical study of elasticity, viscosity, and plasticity, which is of particular importance for polymer processing and solid/fluid mixtures.

The critical study of elasticity relates to Hooke's law, describing the behavior of an elastic solid with applied shear stress and resulting in deformation of the solid. The critical study of viscosity is derived from Newton's law, describing the behavior of a linear viscous fluid with applied shear stress and resulting in deformation of the fluid.

Since the behavior of polymeric materials falls within these two limits, as they are solid at room temperature and fluid at melt temperatures, to fully understand the behavior of the flow of materials one needs a very good education in physics and mathematics. Most die designers, even being engineers, may find it hard to understand the mathematics involved and this can be, however, unnecessary nowadays, as a lot of computer simulation programs exist that save lot of time at a moderate cost.

It suffices to say that the rheology data normally required for calculations and simulation is related to the shear viscosity η, which is defined as follows:

$$\eta = \frac{\tau}{\dot{\gamma}} \tag{2.1}$$

where:

τ = shear stress

$\dot{\gamma}$ = shear rate

The values of shear viscosity, shear rate, and shear stress at different temperatures are obtained from a piece of laboratory equipment called rheometer. These days, many material suppliers publish this data on the Internet, either on their own website or on a combined website, such as *www.CAMPUSplastics.com* or *www.material-datacenter.com*.

Not always is the necessary information available on the CAMPUS website; therefore, the die designer should ask the customer to supply this information on the selected grades of the materials. The customer for whom the die is to be designed will be in a better position to get the data from the material manufacturers, being their customer.

Typical information required for material flow calculations for a grade of LDPE (obtained from CAMPUS) is given in Table 2.1.

Table 2.1 Typical Information Required for Material Flow Calculations for a Grade of LDPE

Temperature [°C]	Shear rate $\dot{\gamma}$ [s^{-1}]	Shear viscosity η [Pa·s]
210	13.3	2870
	30.50	1770
	70.30	1070
	147	676
	323	410
	732	247
	1550	150
	3540	85
	8100	47.9
	16200	29.40

Temperature [°C]	Shear rate $\dot{\gamma}$ [s^{-1}]	Shear viscosity η [Pa·s]
230	12	2500
	29.3	1450
	68.3	910
	145	568
	315	351
	720	214
	1530	130
	3400	76.2
	7800	44
	15600	27.3
250	13.8	1770
	29	1160
	65.9	776
	141	495
	313	303
	712	186
	1500	114
	3350	67.7
	7590	39.8
	15200	25.1

As can be seen from Table 2.1, the information required consists of three temperatures, and at each temperature there are ten readings of shear rate versus shear viscosity. These values of shear rate and viscosity are normally apparent values as obtained from the rheometer. The true values are obtained by applying the correction for non-Newtonian behavior of the melt according to Rabinowitsch.

Without needing to worry too much about what the Rabinowitsch correction is, the designer should ask the supplier of the data if it contains true values or apparent values. Many laboratories can supply both values and many simulation programs accept data in both forms. On the other hand, if the die designer has the ability to perform the flow calculations, then he will be aware of these differences anyway.

2.2.2 Thermodynamic Properties

In the calculations of heat transfer in the extrusion dies, extruder, or downstream equipment (calibration, cooling tanks, etc.), or to determine the cooling and heating capacities of the equipment, thermodynamic properties are required. The thermodynamic properties of the melt that are needed are:

1. Melt density [kg/m^3]
2. Specific heat capacity [J/kg/°C]
3. Thermal conductivity [W/m/°C]

Similar properties of the materials in the solid state are also required:

1. Melting temperature [°C]
2. Freezing temperature [°C]
3. Solid density [kg/m^3]
4. Specific heat capacity [J/kg/°C]
5. Thermal conductivity [W/m/°C]
6. Specific heat of fusion [kJ/kg]

In some cases, these properties are listed in the material manufacturers' literature or can be supplied on request. Some of the material suppliers have these properties listed on the CAMPUS website.

For example, typical thermodynamic properties for the solids and melts of a grade of LDPE are given in Table 2.2 and Table 2.3, respectively.

Table 2.2 Typical Table of Thermodynamic Properties of Solids

Material	Melting temperature [°C]	Freezing temperature [°C]	Density [kg/m^3]	Specific heat capacity [J/kg/°C]	Thermal conductivity [W/m/°C]	Specific heat of fusion [kJ/kg]
LDPE	110.0	90.0	920.0	2300	0.280	130.0

Table 2.3 Typical Table of Thermodynamic Properties of Melts

Material	Density [kg/m^3]	Specific heat capacity [J/kg/°C]	Thermal conductivity [W/m/°C]
LDPE	750.0	2300	0.240

2.3 Equipment

Information about the equipment to which the die is to be fitted or matched in capacity and capability will be needed. This equipment consists of an extruder, a calibrator, a cooling bath, a haul-off, a cutter, a winder, etc.

2.3.1 Extruder

The information required about the extruder is the following:

1. Size of the extruder—i.e., diameter of screw, L/D ratio, compression ratio, etc. (will give the designer some idea of the capacity of the extruder)
2. Type of extruder—i.e., single screw or twin screw
3. Output in kilograms per hour
4. Number of heating zones and spare connections
5. Flange drawing and clamping arrangement
6. Breaker plate drawing

2.3.2 Calibrator

Information about the calibrator is only needed if it is an existing calibrator. In many cases, the calibrator is also designed with the die to suit the required product size and output.

2.3.3 Cooling Bath

The length, width, and depth of the cooling bath give the designer some idea of the limitations on cooling capacity of the line. Sometimes the cooling capacity of the bath can limit the output capacity of the die head.

2.3.4 Haul-off

Information about the haul-off is only needed for the maximum and minimum size of the product. Normally it is assumed that the haul-off will be suitable.

2.3.5 Cutter

The cutter does not normally affect the die design and is only required in the case of special products.

2.3.6 Winder

The size or capacity of the winder does not affect the die design, but can limit the plant capacity.

2.4 Summary of Design Brief

A design brief in a table form as shown in Table 2.4 should be given to the customer by the die designer. This allows to fill in the necessary information so that it is clear to the customer what is expected from the die in terms of its performance. Should there be some differences of opinion, they can be discussed at this stage or an agreement can be reached, either to design the die to suit the equipment or to upgrade the equipment to meet the anticipated output requirements.

Table 2.4 Design Brief

1.	Product	Tube, pipe, cable, etc.
2.	Product range	Minimum diameter and maximum diameter of the product, or diameters of all products in the range
3.	Wall thickness of each product	
4.	Material or materials if more than one	Manufacturers' names and grade names if known
5.	Rheology data	Readings of shear rates [s^{-1}] vs. shear viscosities [Pa·s] at three or more temperatures
6.	Thermodynamic data ▪ Density of each material ▪ Specific heat capacity ▪ Thermal conductivity	 ▪ [kg/m^3] ▪ [J/kg/°C] ▪ [W/m/°C]
7.	Extruder details ▪ Type of extruder ▪ Screw diameter ▪ Extruder output ▪ Flange details ▪ Breaker plate dimensions	 ▪ Single screw or twin screw ▪ [mm] ▪ [kg/h] ▪ Drawing ▪ Drawing
8.	Calibrator	
9.	Cooling bath ▪ Dimensions ▪ Type: vacuum, spray, etc. ▪ Temperature	 ▪ L × W × D

10.	Haul-off ▪ Make ▪ Length ▪ Belt width ▪ Speed min/max	If applicable
11.	Cutter ▪ Make ▪ Length ▪ Speed min/max	If applicable
12.	Winder ▪ Make ▪ Diameter ▪ Speed min/max	If applicable

3 Design of a Simple Die

To understand the principles of die design for the extrusion of pipes and tubes, wire coating, cable covering, etc., an illustrative example of the design of a simple die can be appropriate. Once the steps involved in the design criteria are understood, the design of more complicated dies can be easier.

3.1 Design Brief

As described in the previous chapter, the first step of any die design is a design brief, and it is assumed that the design brief by a particular customer is sent for the design of the new die as shown in Table 3.1.

Table 3.1 Example of a Design Brief

1.	Product	Pipes and tubes
2.	Product range	1. Ø20 mm 2. Ø25 mm 3. Ø32 mm 4. Ø40 mm 5. Ø50 mm
3.	Corresponding wall thicknesses	1. 1.50 mm 2. 1.90 mm 3. 2.40 mm 4. 3.00 mm 5. 3.70 mm
4.	Material or materials if more than one	Manufacturers' names Material type: flexible PVC of a certain grade
5.	Rheology data	Readings of shear rates [s^{-1}] vs. shear viscosities [Pa·s] at three or more temperatures. Supplied by the manufacturers.
6.	Thermodynamic data ▪ Density of each material ▪ Specific heat capacity ▪ Thermal conductivity	 ▪ [kg/m^3] ▪ [J/kg/°C] ▪ [W/m/°C]

Table 3.1 Example of a Design Brief *(continued)*

7.	Extruder details ▪ Type of extruder ▪ Screw diameter ▪ Extruder output ▪ Flange details ▪ Breaker plate dimensions	 ▪ Single screw ▪ ⌀60 mm ▪ 50 kg/h ▪ Drawing supplied ▪ Drawing supplied
8.	Calibrator	N/A
9.	Cooling bath ▪ Dimensions ▪ Type: vacuum, spray, etc. ▪ Temperature	 ▪ L × W × D – N/A ▪ N/A ▪ N/A
10.	Haul-off ▪ Make ▪ Length ▪ Belt width ▪ Speed min/max	Not applicable
11.	Cutter ▪ Make ▪ Length ▪ Speed min/max	Not applicable
12.	Winder ▪ Make ▪ Diameter ▪ Speed min/max	Not applicable

From the design brief in Table 3.1, it is evident that the product to be made is pipes and tubes of a minimum diameter of 20 mm and a maximum diameter of 50 mm, with their respective wall thicknesses of 1.50 mm and 3.70 mm; the material is PVC (plasticized), and the maximum output is 50 kilograms per hour.

3.2 Design of Pin and Die Bush

In Chapter 1, an introduction to the die parts was given. The die design begins with the design of the die bush (07) and the pin or mandrel (08), as illustrated in Figure 1.1 in Chapter 1. From the design brief in Table 3.1, the minimum and maximum sizes of the pipes to be produced are clear. The difference in the terminology between “pipe” and “tube” has already been clarified. Since the product range of 20 mm in diameter to 50 mm in diameter falls within both definitions, all the products within this example are referred to as pipes.

To start the die design, the designer has to perform some calculations to decide upon the size of the die. In determining the size of the die and the pin for each size of pipe, it is important to understand that the size of the die which forms the outside of the pipe and the size of the pin which forms the inside of the pipe are different to the sizes of the outside and inside of the pipes.

The reason for this difference is that as the plastics are extruded from the die, most of the times, the extrudate that emerges from the die is larger than the size of the die, which is due to the die swell phenomenon as explained in many textbooks on plastics extrusion [1, 2]. This swollen part of the extrudate is sized in the calibrator with vacuum force and it shrinks further as it cools in the cooling water bath. Also, the product is pulled by the haul-off, which exerts some pulling force on the extrudate. To accommodate for the die swell, the shrinkage, and the haul-off forces, a relationship between the cross section of the finished product and the annulus area between the die and the pin is established. This relationship is called draw down ratio and is defined as follows:

3.2.1 Draw Down Ratio

As explained above, the draw down ratio (DDR) is the ratio of the cross section of the annulus area between the die and the pin to the cross section area of the finished product [3]. So, if:

D_1 = diameter of the bore of the die

D_2 = diameter of the pin

d_1 = outside diameter of the pipe

d_2 = inside diameter of the pipe

$$Draw\ Down\ Ratio\ (DDR) = \frac{\frac{\pi}{4}\left(D_1^2 - D_2^2\right)}{\frac{\pi}{4}\left(d_1^2 - d_2^2\right)}$$

$$DDR = \frac{D_1^2 - D_2^2}{d_1^2 - d_2^2} \tag{3.1}$$

In many cases, the factor by which this ratio is increased is a matter of experience. Many experienced extrusion engineers and technicians would stipulate the best ratio that, for them, works better. Ratios like 2:1 or 1.5:1 are often mentioned. Such estimates do not consider the elongation properties of the materials used. Some polymers can be stretched more than others. For instance, materials like polyamide can be stretched several times more than rigid PVC.

Some guidance on the factor is given in Walter Michaeli and Christian Hopmann's *Extrusion Dies for Plastics and Rubber* [1], as shown in Table 3.2.

Table 3.2 Guidance for Draw Down

Material	Increased orifice cross section
Rigid PVC (small profiles)	5–10%
Rigid PVC (large profiles)	3–5%
Plasticized PVC (small profiles)	12–15%
PE	15–20%
PS	8–10%
PA	20%

Generally, the DDR should be kept as low as possible within the guidelines given in Table 3.2, and it can be optimized with simulation programs to get the best combination between the pressure drop in the die and the shear stress in the land area between the pin and the die. An illustration of different DDRs in relation to land length, pressure drop, and shear stress is given later, in Chapter 5.

Figure 3.1 shows the die annulus and the pipe cross section. ID is the inside diameter and OD is the outside diameter.

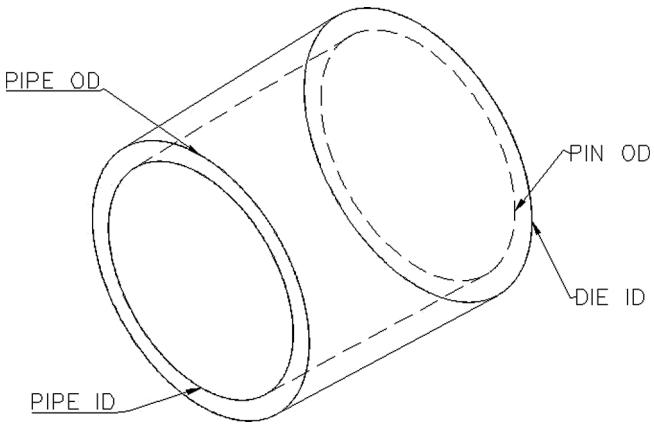

Figure 3.1 Die annulus and pipe cross section

For a given product range as mentioned above, a table of dimensions can be created using a program like Microsoft Excel, to facilitate the die design, as shown in Table 3.3.

Table 3.3 Draw Down Ratio Calculations

Pipe size [mm]	Pipe OD [mm]	Pipe ID [mm]	Wall thickness [mm]	Die ID [mm]	Pin OD [mm]	DDR
ø50	50.00	42.60	3.70	52.50	44.73	1.10
ø40	40.00	34.00	3.00	42.00	35.70	1.10
ø32	32.00	27.20	2.40	33.60	28.56	1.10
ø25	25.00	21.20	1.90	26.25	22.26	1.10
ø20	20.00	17.00	1.50	21.00	17.85	1.10

In Table 3.3, the draw down ratio 1.10 : 1 is used to work out the dimensions of the pin and the die in relation to the finished products. In other words, the annulus area between the pin and the die is 10% larger than the cross-sectional area of the pipes. In Table 3.3, the die ID is obtained by multiplying the pipe OD by 1.05 and the pin OD is obtained by multiplying the pipe ID by 1.05. The square of the factor 1.05 is 1.1025, which is rounded off to two decimal places as 1.10.

3.2.2 Draw Down Ratio Balance

Sometimes it is necessary to make a small adjustment to the size of the die or the size of the pin derived from the calculations of the draw down ratios. This correction is required due to the differences in the velocity of the melt along the inside wall of the die and the outside wall of the pin, due in turn to differences in the distances caused by the conical section of the two parts. As it is difficult to calculate the velocity differences in the two conical surfaces, the geometry of the annulus gap between the pin and the die to the cross section of the pipe is obtained as follows.

The draw down ratio balance (DRB) is the relationship of the ratio of the outside diameter to the inside diameter of the tooling with the ratio of the outside diameter to the inside diameter of the product [3]. As the products under consideration are pipes, the DRB corresponds to the ratio of the die ID (D_1) to the pipe OD (d_1) divided by the ratio of the pin OD (D_2) to the pipe ID (d_2):

$$Draw\ Down\ Ratio\ Balance = \frac{D_1}{D_2} \times \frac{d_2}{d_1} \tag{3.2}$$

In the case of the ø40 mm pipe in Table 3.3, the DRB would be as follows:

Die ID (D_1) = 42.00 mm

Pipe OD (d_1) = 40.00 mm

Pin OD (D_2) = 35.70 mm

Pipe ID (d_2) = 34.00 mm

Introducing these values in Equation (3.2):

$$\text{DRB} = \frac{42.00 \times 34.00}{35.70 \times 40.00} = \frac{1428.00}{1428.00} = 1.00$$

In most of the cases of pipe extrusion a DRB of 1.00 is satisfactory; in exceptional cases, if any adjustment is required, it usually is slightly positive, of 3 to 10 %. A negative DRB adjustment is used in some instances, but it should be avoided if possible.

The DRB can be increased by either increasing the die inside diameter or reducing the pin outside diameter, or changing both of them by small amounts. The reverse procedures are followed in the unlikely event of decreasing the DRB.

3.2.3 Die Land

So far, only two dimensions of the die and the pin have been established, namely the die ID and the pin OD. The die land is the third dimension. The die land is the parallel portion between the pin and the die, as shown in Figure 3.2.

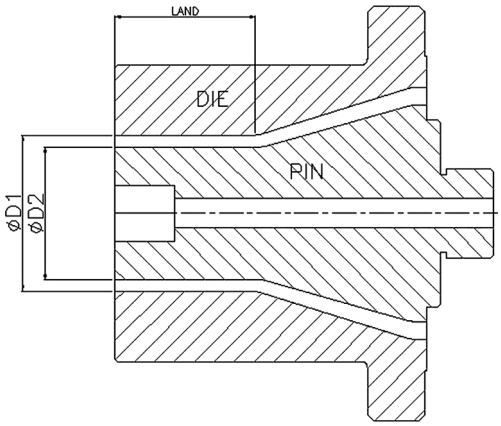

Figure 3.2 Pin and die

The geometry of the land is usually between 10 to 30 times the gap between the outside diameter of the pin and the inside diameter of the die. A larger die land results in great pressure drops in this region and also increases the melt residence time, whereas a shorter die land will have the reverse effect.

In the above example of ø40 mm pipes, the gap between the pin and the die is (42.00-35.70)/2, which is 3.15 mm. Therefore, the minimum land length would be in the region of 31.50 mm (10 times the die gap) and the maximum in the region

of 94.50 mm (30 times the die gap). In many cases, the land length is decided according to the previous experience of the technicians. The land length also depends on the design of the die itself. For a good design of the die, if the melt is properly distributed by the distributor of the die and the angle of convergence of the melt towards the land is correct, a short land is sufficient. On the other hand, for a die that has been badly designed, the land length is manipulated to iron out the discrepancies of the melt distribution.

The effect of the land length on the melt generally is that the longer the land, the greater the pressure drop in the die. A great pressure drop in the land area results in great shear stress, and a shear stress greater than 140 kPa results in melt fracture or shark skin. The pressure drop through the annulus section of the die, the shear rate, the shear stress, and the residence time are all related to each other through the rheological and thermodynamic properties of the materials. However, trying to calculate these parameters at this stage would be to digress from the main theme of this chapter, the design of a simple die; therefore, this will be discussed in the next chapter.

3.2.4 Convergent Section

The next section after the die land is the convergent section. In this section, the melt enters from the relaxation chamber, which is the area between the connecting ring and the connecting mandrel, as shown in Figure 1.1 in Chapter 1. This is an important section for taking the melt from the relaxation chamber and conveying it to the die land, where the shape of the final product is formed. To make a smooth transition from one to the other, the diameter of this section is usually between 1.5 and 2 times the largest die ID, and the gap at the start of this section is about 1.5–3 times the die gap. The preferred angles of convergence are 30° to 60° inclusive. To get the design of this section right is important for making a good product; therefore, the following examples demonstrate these relationships.

When designing a die head for a range of products as in this case, from Ø20 mm to Ø50 mm, the starting diameter of this section is kept close to 1.6 times for the largest product in the range. This is done to ensure that the smallest product (i.e., Ø20 mm) does not have a lot of material sitting in this region, which would result in a long residence time and a low shear rate.

In Figure 3.3, the ratio of Ø85.00 : Ø52.50 is approximately 1.6 to 1. The gap at the start of this section is 6 mm, compared to 3.89 mm at the die exit (i.e., a ratio of about 1.54 : 1). The die angle of 34°15’ is more than 30° and less than 60°. Following these criteria, the design of the pin and die section for the smallest tube in this product range is shown in Figure 3.4.

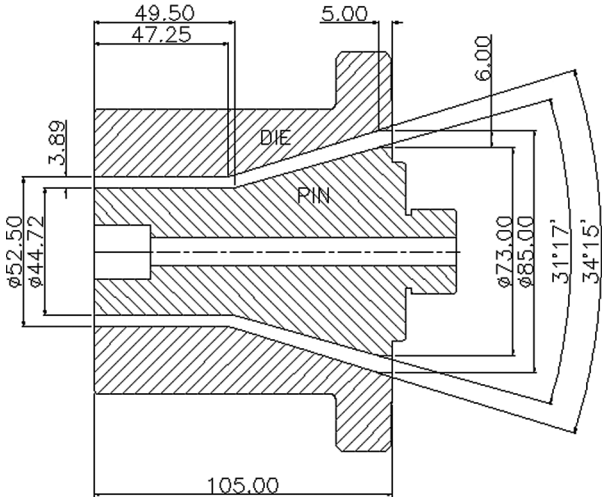

Figure 3.3 Pin and die for ø50 mm pipe

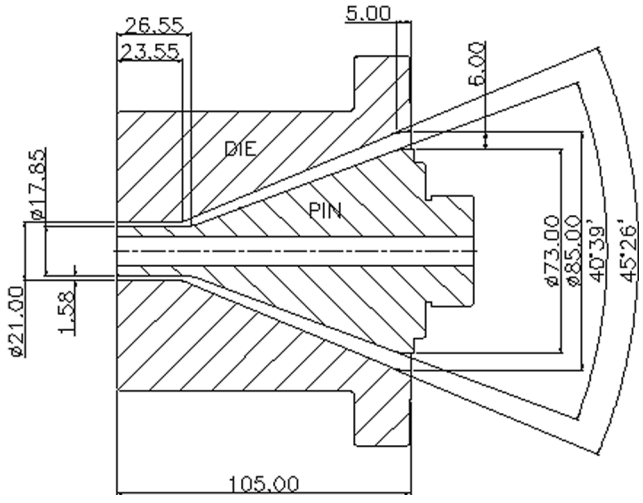

Figure 3.4 Pin and die for ø20 mm pipe

In the case of ø20 mm pipes, the ratio of the annulus gap at the entrance of the convergent section and at the die exit is roughly 4:1. This point is further demonstrated in the next chapter using a suitable simulation program.

Fully detailed drawings of all the dies and the pins are shown in Figure 3.18 and Figure 3.19, respectively.

Let us now note a small straight section at the end of the pin and the die, which has been created for ease of tool-making and for matching it with the next section; this is the relaxation chamber.

3.3 Relaxation Chamber

The next section after the die and the pin is the relaxation chamber. It is called relaxation chamber because the stresses on the melt stream caused by the spider legs are allowed to relax in this part of the die. This section is also used in conjunction with other distributors, like the spiral mandrel and the side-fed die in different forms.

In the spider die, this area is formed by the connecting ring and the connecting mandrel. The left hand inside diameter of the connecting ring is made to match with the right hand inside diameter of the die, and the left hand outside diameter of the connecting mandrel is matched with the right hand outside diameter of the pin.

On the other hand, it is matched to the spider diameters. The length of this section for heat sensitive materials is kept as short as possible, but long enough to make the two cones converge reasonably towards the diameters of the pin and the die, as shown in Figure 3.5. For materials like polyolefin this section is made much longer, to allow the weld lines to knit together.

Figure 3.5 shows the relationship of the relaxation chamber with other parts of the die.

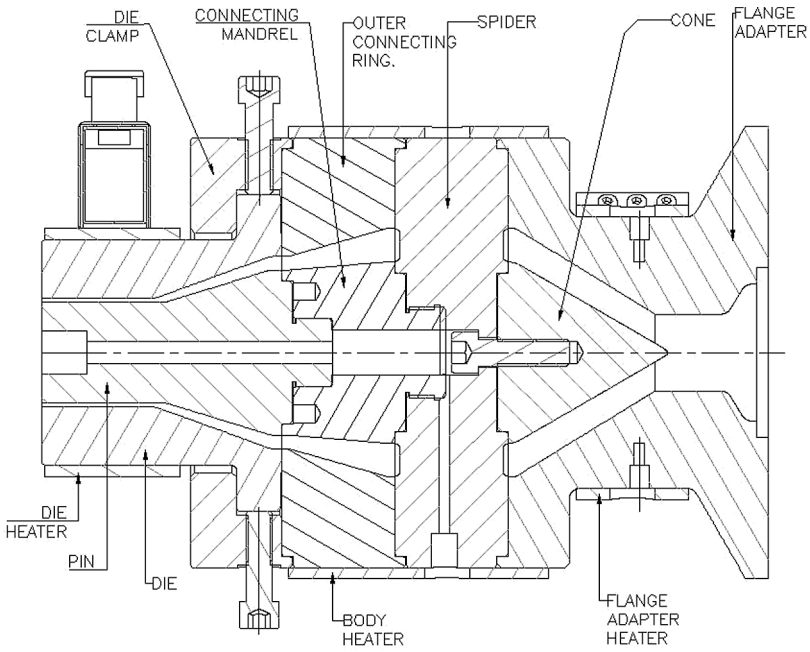

Figure 3.5 Connecting ring and mandrel

From a design point of view, the inclusive cone angle inside the connecting mandrel should be between 45° and 15°, to make the weld lines knit. Figure 3.6 shows a typical connecting ring and mandrel for a polyolefin material. The connecting ring and the connecting mandrel for polyolefin and some other plastics are made longer, to give more time for the weld lines caused by the spider legs to join. Therefore, the connecting ring and mandrel should be designed so that they are easily interchangeable, and thus the die head can be used for different materials.

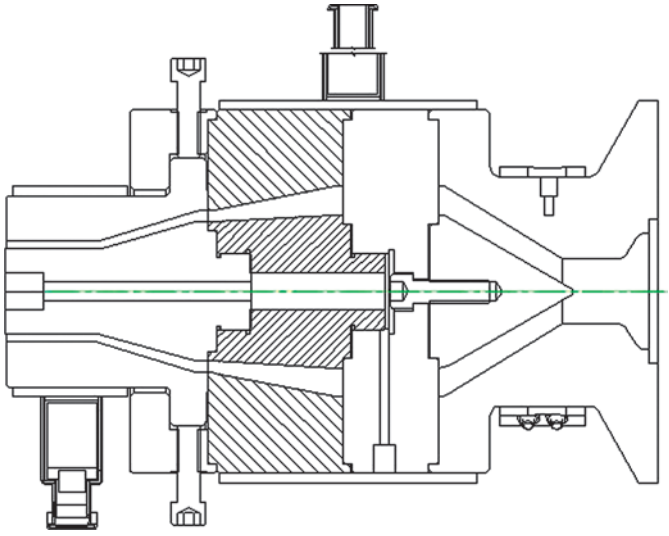

Figure 3.6 Connecting ring and mandrel for PE

In some cases, another ring—called choke ring—is incorporated inside the connecting ring to choke the flow of the melt, in order to minimize the weld lines.

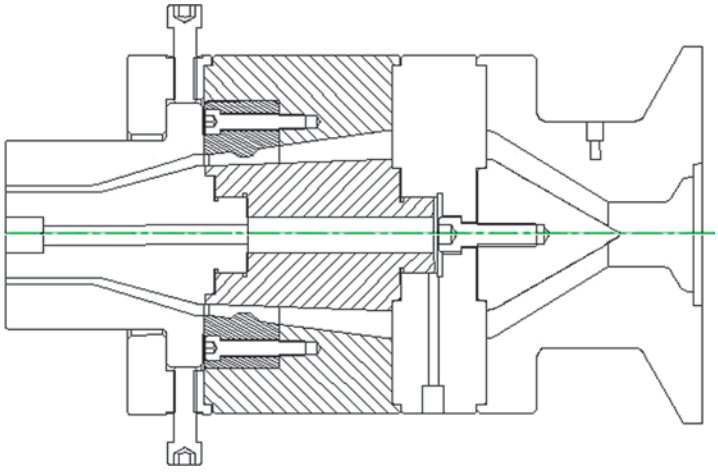

Figure 3.7 Connecting ring, mandrel, and choke ring

The idea behind the incorporation of the choke ring is to increase the pressure in the relaxation chamber and force the melt through a narrow gap to knit the weld lines. In some instances, this approach works; in others, it does not. The reason for it not working is that the melt is choked in this area for a very short time and does not give the weld lines the chance to knit. Figure 3.8 shows the weld lines created by the spider legs.

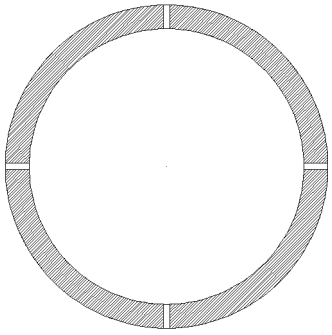

Figure 3.8 Typical weld lines in a pipe

■ 3.4 Spider

The next section after the relaxation chamber is the spider. The melt formed into an annular form by the torpedo or cone enters the spider and is divided by the spider legs into sections. The design of the spider legs is such that every effort is made for the melt to join again as it leaves the spider by the conical section of the spider legs, as shown in Figure 1.4 in Chapter 1. The length of the spider is kept as small as possible to streamline the melt flow; at the same time, this section should be strong enough to withstand high pressures. The die heads of this design can have pressure up to 600 bar built up in the head. Usually, spider legs are made 30 to 80 mm long and 10 to 25 mm high.

The spider legs and the channels need to have a good finish on them to minimize the chances of degradation; therefore, all the areas are highly polished, and the height of the legs has to be adequate to get to all areas of the channels for polishing. The corners at the root of the spider legs have radii on both sides to minimize the melt stagnation. The number of spider legs is usually 4–6 and may go to 8 in very large dies. Normally, a hole for air is incorporated in one of the spider legs, so that the melt flow is not disturbed elsewhere.

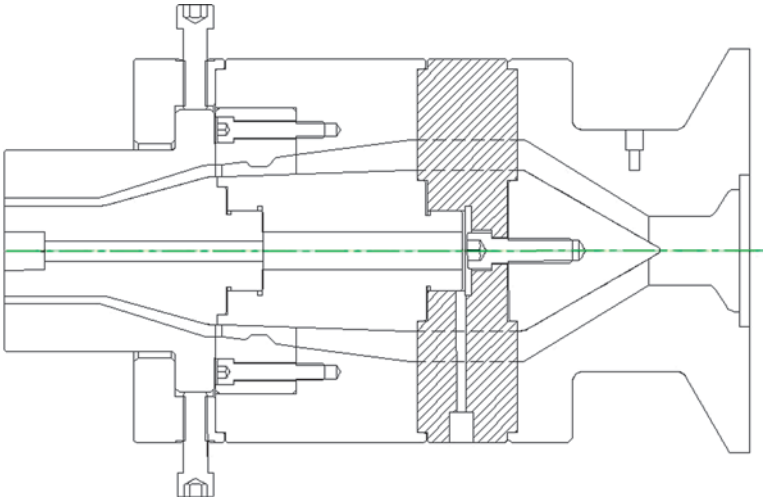

Figure 3.9 Position of spider in the die head

As the flow marks are a common defect with the spider type of dies, several methods to eliminate this defect have been tried as follows:

1. Increasing the melt temperature in this area to make the melt flow easily, but this is not desirable for heat sensitive materials. Similarly, the increase of residence time can reduce the shear stress, but may cause the degradation of heat sensitive polymers.

2. A uniform distribution along the circumference, using smearing devices like axially rotating one or more parts of the die. This causes further problems of leakage from the die, due to poor sealing. This method has been used in large PVC film dies, but needs additional means of rotation, which adds to the cost of the die.

3. Coating the spider legs with non-wetting materials like PTPE. The problem is that the coating wears out quickly. Hard chrome plating of all the parts of the dies for PVC are common.

4. Strong converging angles and choking the material, as discussed before, can make some improvements to eliminate the flow marks.

5. Modified designs of spider legs have been tried as follows:

a) Offset spider legs: Spider legs are offset to support the mandrel, as shown in Figure 3.10. This type of arrangement is used specially in parison dies in extrusion blow molding processes. The advantage is that the flow marks do not extend all the way through the entire wall of the extrudate. In parison dies, the number of spider legs can be 2 or 3, which help the further elimination of the weld lines in the extrudate. The adjustment to the flow resistance is made by the die adjustment. In a conventional spider die this adjustment can be very difficult to make manually. In blow molding parison dies, this adjustment is made hydraulically.

Figure 3.10 4 spider legs

b) Tangential spider legs: This type of legs has the advantage of moving the flow marks around the circumference of the extrudate to some extent, but does not spread over a large area completely. Spider legs are generally weak to support the mandrel and are extremely expensive to produce. Machining an air hole through the spider legs is difficult. Therefore, this type of spider is seldom used in practice.

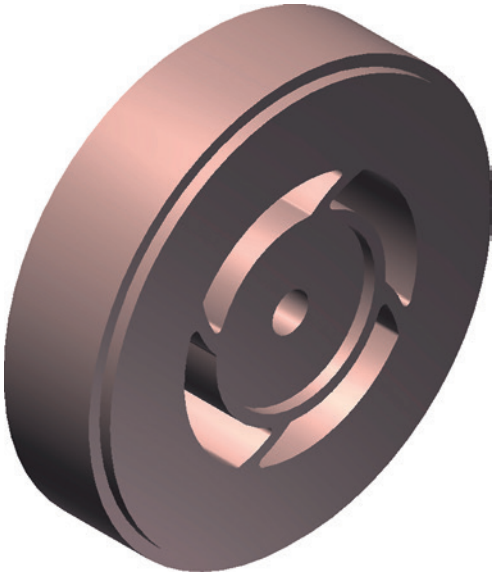

Figure 3.11 Tangential spider legs

c) Breaker plate spider: This type of spider is based on the breaker plate concept and is conceived to break the melt flow into small strands, which are joined together by the converging angles of the relaxation chamber discussed above. This type of spider has been successfully used for small die heads, where varieties of materials (e.g., plasticized PVC and polyolefin) are processed for different purposes. Materials like rigid PVC would degrade due to the area of stagnation in between the holes and the high shear stress. The areas around the perforated holes are weak to support the mandrel and are relatively expensive to produce. Therefore, this type of spider has a limited use.

Figure 3.12 Breaker plate spider

d) Radial spider legs: In this type of spider, the spider legs are staggered to break up the flow pattern, and joined again in the relaxation section. The whole idea of this type of design is to move the flow marks around the circumference to eliminate the weld lines. The problem is that it leaves bigger marks than the normal spider, because the ends cannot be tapered as in the case of a normal spider, as shown in Figure 3.13.

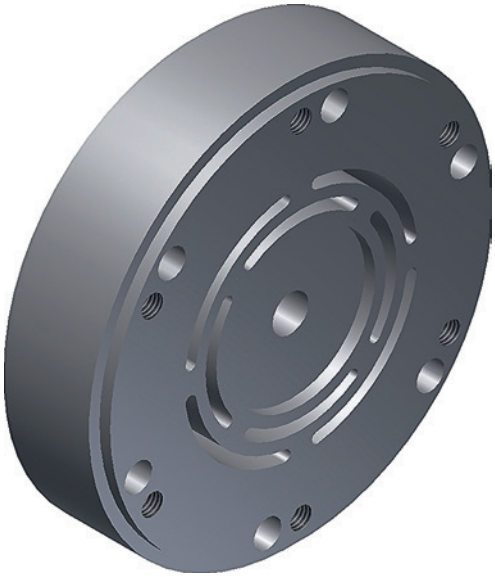

Figure 3.13 Radial spider legs

6. Alternative designs of distributors like a side-fed distributor and a spiral mandrel distributor will be discussed in detail in Chapter 5. The spider type of distributor is used mainly for simple dies and because of the cost of the modifications to eliminate the flow problem; this type of distributor is avoided for polyolefin and other materials like polyamides. Spiral mandrel dies are now widely used for various applications, because of their superiority in distributing the melt uniformly around the circumference and for the elimination of flow marks, as will be discussed in detail in Chapter 5.

3.5 Cone or Torpedo

The next part that is attached to the spider is the cone or, as named sometimes, the torpedo. The function of this part is to spread the slug of melt from the round section to the annular section. This is done by forcing the material outwards against the inside wall of the flange adapter. The design of the torpedo is quite simple, as shown in Figure 3.14. The converging angle should be 30° – 60° and should blend into the inside of the spider to avoid any step. The radius at the end of the cone should be kept as small as possible. A large radius at the end of the cone creates a dead spot for the melt, where melt degradation can occur. On the other hand, a sharp corner is damaged easily.

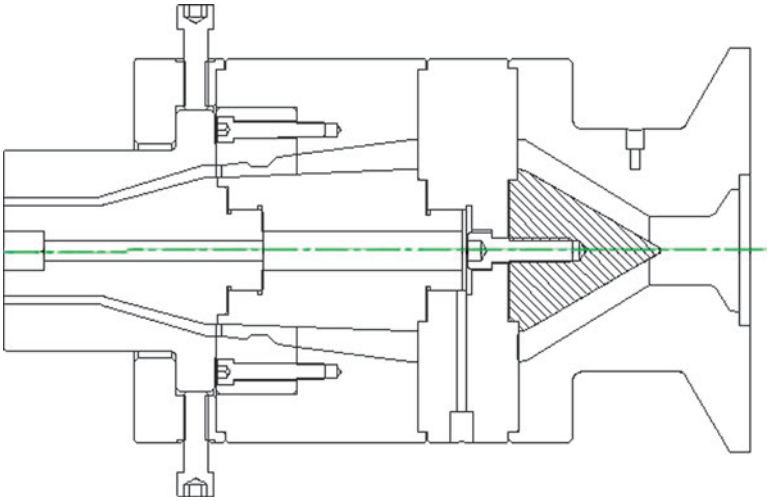

Figure 3.14 Torpedo

3.6 Flange Adapter

The flange adapter has been discussed in Chapter 1. The design of it on the extruder side is governed by the extruder and breaker plate geometry, and on the other side by the spider and the cone.

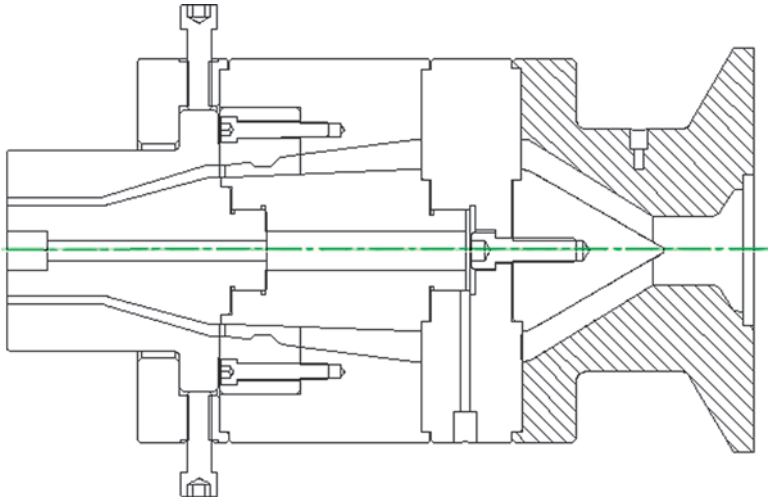

Figure 3.15 Flange adapter

3.7 Die Clamp Plate

The last part in the die design is the die clamp plate and has been discussed in Chapter 1. As stated in Chapter 1, this part is also known as the die-adjusting ring, because of its dual function: it clamps the die bush to the die body and the radial bolts in it are used to adjust the radial wall thickness.

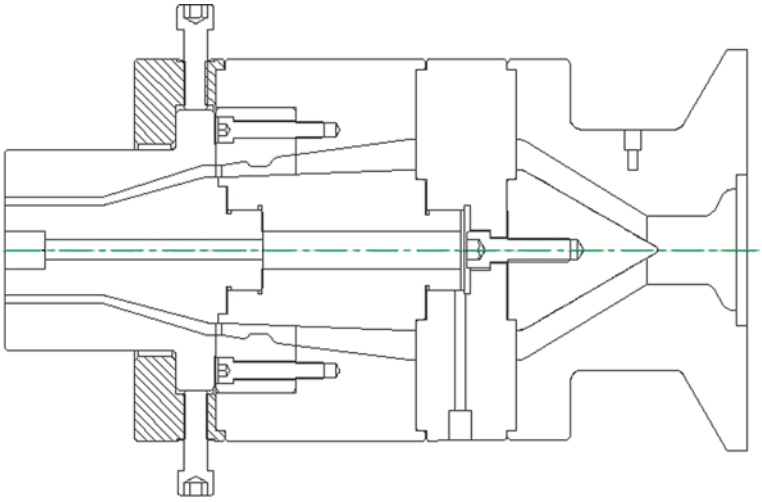

Figure 3.16 Die clamp plate

3.8 Screw Fixings

So far, the guidelines for the design of the die parts have been covered but nothing has been said about holding all the parts together. The rule of thumb is to put as many bolts in as you can get in the die. This is the layman's approach and, for a better design, a more scientific approach is adopted to prevent the leakage of the melt from the die or to stop the breaking of the bolts with excessive pressure. The die is resisting the pressure generated by the force with which the melt is being pushed from the extruder through the die and as the melt flows through the die, the pressure is dropping from one end to the other. Therefore, the pressure is higher at the extruder end than at the extrudate exit end.

Since pressure is equal to force per unit area, the components to calculate are the force acting on the mating parts of the die and the area upon which this force is acting. This area is normally called projected area.

It was said previously that the dies can have a pressure up to 600 bar built in them. Normally, dies are designed for 200 bar and 600 bar can be considered as a safety factor of 3 : 1. For small dies with low output, a safety factor of 2 : 1 can be acceptable. Whatever the safety factor is decided for a die, this pressure has to be counterbalanced by the strength of the bolt. The strength of bolts from most bolt manufacturers' catalogues can be found as "induced load" in kN (kilonewtons). From the units, it is clear that the induced load is a force that a bolt can withstand safely. Therefore, the calculations of the number of bolts would be as follows:

$$\text{Number of bolts} = \frac{\text{Pressure in the die} \times \text{Projected area}}{\text{Induced load of a bolt}} \tag{3.3}$$

where:

- Pressure is in N/m^2
- Projected area is in m^2
- Induced load of a bolt is in N (found in the bolt manufacturers' catalogues)

Taking the example of the current die in consideration, the number of bolts required to hold the flange adapter to the spider, as shown in Figure 3.17, for a maximum pressure of 400 bar (400×10^5 N/m^2 = 40 MPa) in the die, a projected area of 110 mm diameter, and an induced load for M12 bolts taken from the Unbrako® catalogue as 66,700 N, can be calculated as follows:

$$\text{Number of bolts} = \frac{\left(400\times10^5\right)\times\left(\frac{\pi}{4}\times110^2\right)}{66700\times10^6} = 5.7$$

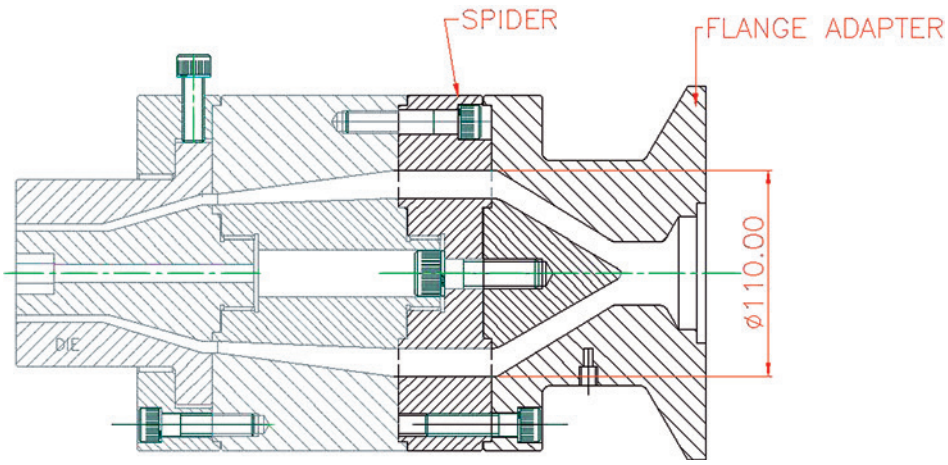

Figure 3.17 Bolting of die

Say 6 bolts of M12 would be adequate in between the flange adapter and the spider, and the same number of bolts to hold the spider to the outer ring can be used. Since the pressure in the die is dropping in the direction of the flow (i. e., towards the front of the die), 4 bolts to hold the die clamp ring to the outer ring will be sufficient. If the designer has any doubts, the size of these bolts in the front can be increased from 12 mm to 16 mm.

3.9 Heating of Die

All dies for the processing of thermoplastics are heated. Besides some special applications where hydraulic media is used for heating, electric heating is most commonly used for heating the dies. Electric heating is accomplished by the use of different types of heaters such as cartridge, ceramic heaters, aluminum cast heaters, and mica band heaters.

Mica band heaters, aluminum cast heaters, and ceramic band heaters are made to match the exact shape of the die and to wrap around it; therefore, they provide a more uniform heating for round dies, whereas cartridge heaters are more common for sheet and profile dies.

For round dies, mica band heaters are more commonly used because of their low cost and ease of replacement. Heater manufacturers can generally give free advice on the suitability of the heater for the application and the wattage requirements. The maximum wattage for a mica band heater is 25 watts per square inch of surface area, which equates to about 3.87 watts per square centimeter.

From a design point of view, the heaters should be designed to cover the maximum surface area of the die. Provision for thermocouple holes and other fitments on the die is made in the design. If parts like the flange adapters are fitted towards the end of the die, edge slots are made in the heater for ease of fitting and removing of the heater from the die. Clearance holes corresponding to radial holes in the body of the die should be incorporated to avoid localized overheating underneath the band heater, which can burn the heater element quickly.

For large diameter and also for multilayer dies, internal heaters are fitted in the die to heat the inside layer, which is far away from the outside heater. Sometimes cartridge heaters are fitted in the pin to achieve a better surface finish on the inside of the product.

The electric connection to the heater is made either by fitting a 2–3 pin socket on the heater or via an insulated armored cable attached to the heater.

3.10 Detailed Drawings

Having gone through the general principles of the spider die design, the detailed drawings prepared for manufacturing all the parts are shown below:

3.10.1 Die Bush

A detailed drawing of the die bush in Figure 3.18 shows all the common dimensions for all the sizes. The dimensions, which vary with each size of the pipe, are listed separately in Table 3.4. It should be noted that the back face of the die bush should be perfectly flat, to provide a good seal against the corresponding face of the outer connecting ring. The inside surface of the die bush should be highly polished and sectional changes should be blended with generous radii.

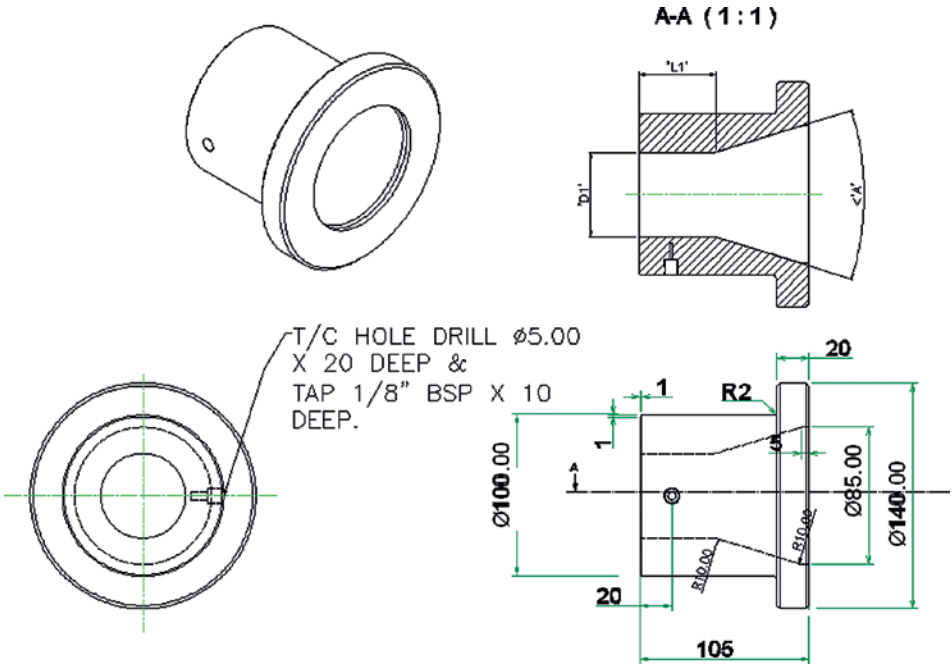

Figure 3.18 Detailed drawing of die bush

Table 3.4 Dimensions for Pipe Sizes in Section A-A

Pipe size [mm]	D1 [mm]	Land L1 [mm]	Angle A
50.00	52.50	58.35	42°37'
40.00	42.00	47.25	44°21'
32.00	33.60	37.80	44°54'
25.00	26.25	29.93	45°29'
20.00	21.00	23.78	45°33'

3.10.2 Pin

A detailed drawing of the pin in Figure 3.19 shows all the common dimensions for all the sizes. The dimensions, which vary with each size of the pipe, are listed separately in Table 3.5. The front end of the pin has a hexagon cut to fit a standard Allen key for tightening the pin to the connecting mandrel. The back face of ø73.00 mm fits against the corresponding diameter of the mandrel. Also note that generous radii to blend the sections should be used and the outer surface should be highly polished to eliminate the melt sticking to the surface.

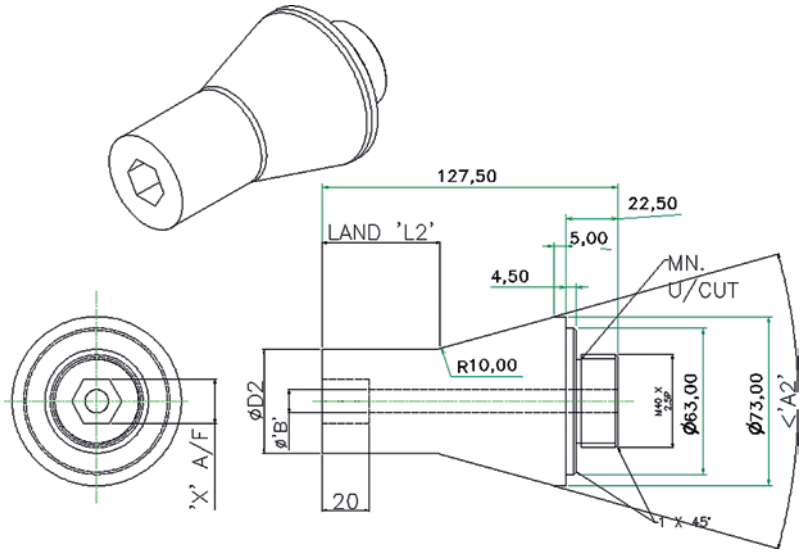

Figure 3.19 Detailed drawing of pin

Table 3.5 Dimensions for Pipe Sizes

Pipe size [mm]	D2 [mm]	Land L2 [mm]	Angle A2	X across flats A/F	Diameter B [mm]
50.00	44.73	61.00	39°50'	19.00	10.00
40.00	35.70	50.00	40°54'	19.00	10.00
32.00	28.56	40.00	40°38'	17.00	10.00
25.00	22.26	32.00	40°55'	12.00	8.00
20.00	17.85	26.00	40°52'	12.00	8.00

3.10.3 Clamp Plate

A detailed drawing of the clamp plate is shown in Figure 3.20. One dimension of ⌀180.00 mm has tolerances as shown in Figure 3.20, because this diameter fits closely on the corresponding diameter of the outer ring.

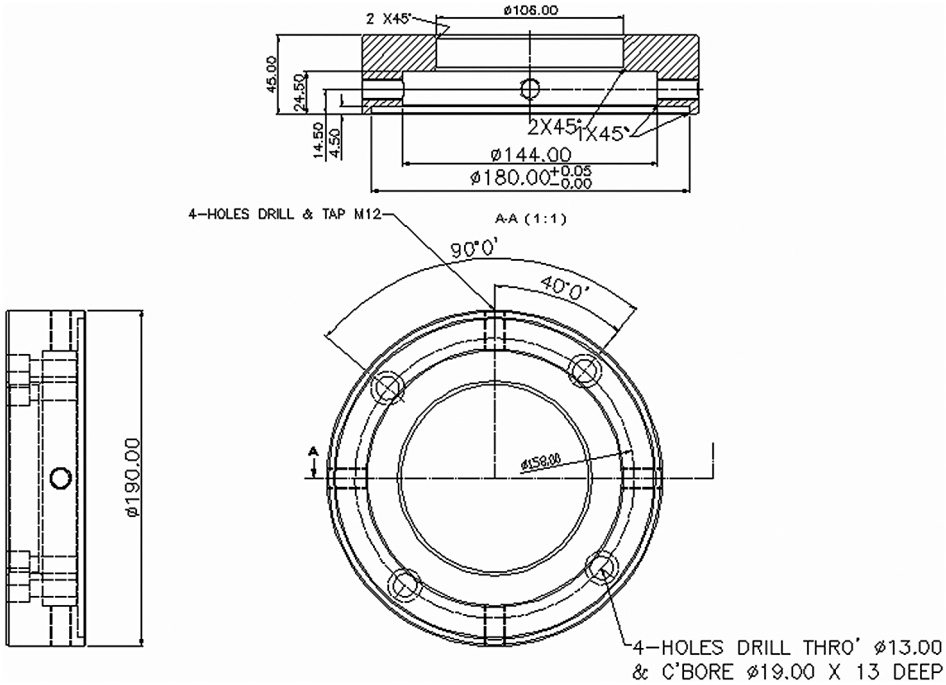

Figure 3.20 Detailed drawing of clamp plate

3.10.4 Connecting Ring

A detailed drawing of the connecting ring, where one side is connected to the die clamp ring and the other side is connected to the spider, is shown in Figure 3.21. The inside form is to match with the inside diameter of the die bush on one end and the other end matches with the inside diameter of the spider.

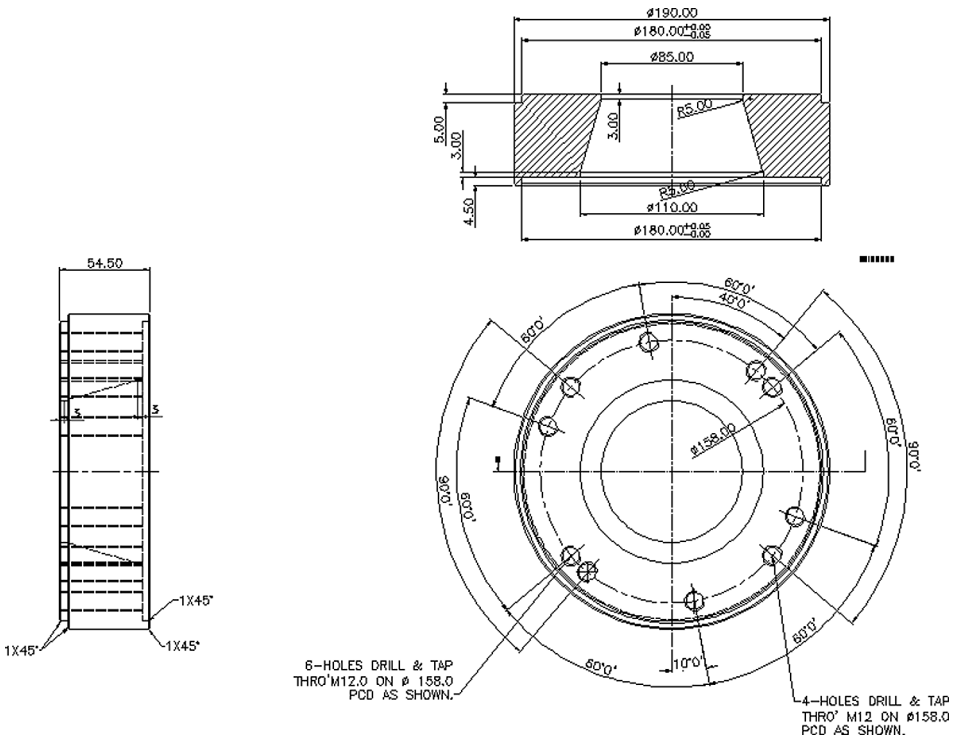

Figure 3.21 Detailed drawing of connecting ring

3.10.5 Connecting Mandrel

This part of the spider die fits between the pin and the spider. Ø73.00 mm of the connecting mandrel in Figure 3.22 is matched with Ø73.00 mm of the pin in Figure 3.19. On the other hand, Ø80.00 mm of the connecting mandrel is matched with Ø80.00 mm of the spider in Figure 3.23. The mating flat faces on these parts are tightened together to avoid any melt leakage. A 19 mm across flat hexagon is cut to fit a standard key for tightening and dismantling.

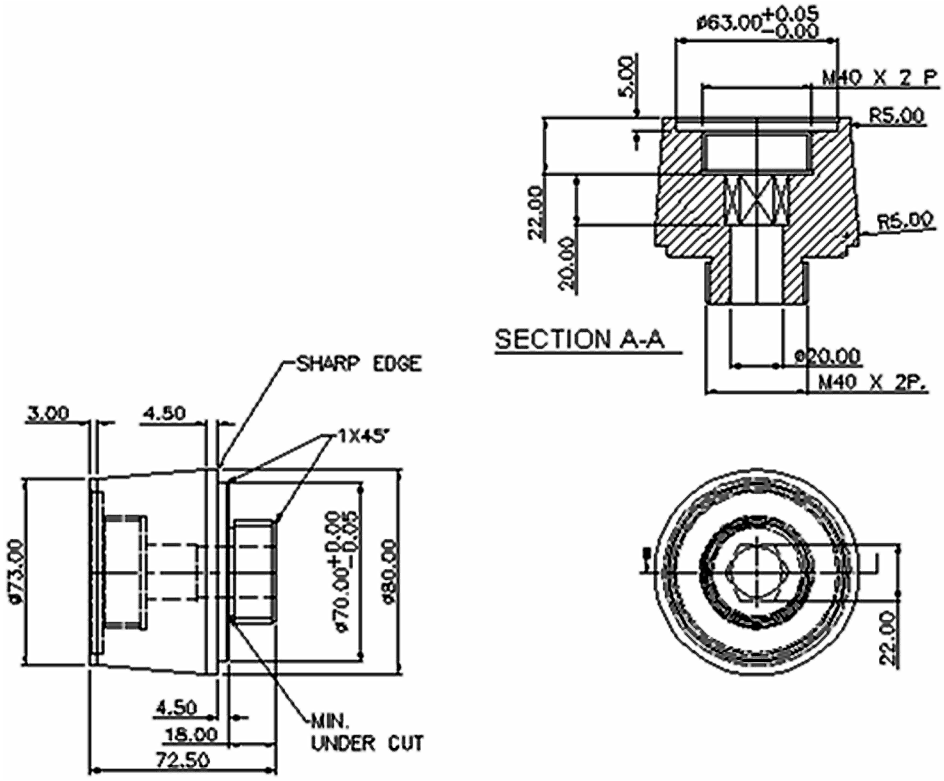

Figure 3.22 Detailed drawing of connecting mandrel

3.10.6 Spider

The spider is the heart of the spider die. It distributes the melt flow into an annular section; therefore, the parts forming the outside and inside of the annular sections both before and after are attached to it. In other words, the flange adapter and the cone or torpedo are connected on the right hand side of the spider and both the outside connecting ring and the inside connecting mandrel are attached on the left hand of the spider.

The drawing in Figure 3.23 also shows the shape of the spider legs in Section D-D, where the spider legs on both ends are made of a pointed shape and the middle is made wide to strengthen the structure of the spider legs and to withstand the melt pressure. One of the spider legs has an air hole drilled for passing air to the center of the spider. In some cases, a thermocouple hole is also drilled in one of the spider legs for sensing the temperature closer to the stream of melt flow.

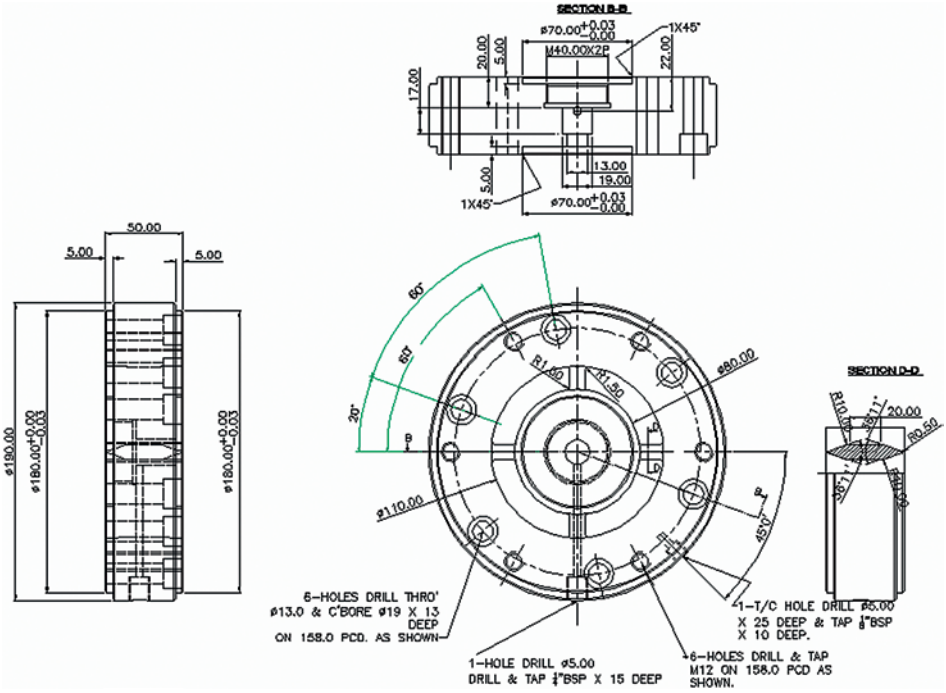

Figure 3.23 Detailed drawing of spider

3.10.7 Torpedo or Cone

As previously stated, the torpedo or cone is used to spread the melt from the solid round section to the annular section, which is then guided through the spider. The main feature of this part is that the angle of the cone is kept below 60° and above 30° to spread the material in a reasonably short distance. A larger angle would create excessive shear stress and a higher pressure in this region; a small angle would result in low shear rates and a higher residence time, which could cause degradation of the melt in heat sensitive materials. The end radius is also kept as small as possible, since a large radius at the end of the cone can cause stagnation of the melt in this region.

The diameter of 80.00 mm is matched with the inside diameter of the spider and the diameter of 70.00 mm is to match with the recess in the spider for location.

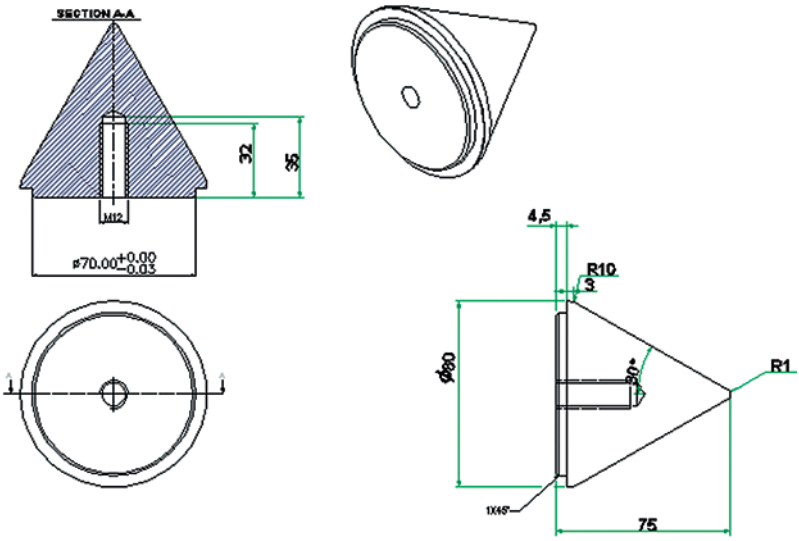

Figure 3.24 Detailed drawing of torpedo or cone

3.10.8 Flange Adapter

As described before, the purpose of the flange adapter is to connect the extruder flange to the die head. Therefore, one end of the flange adapter is designed as a replica of the extruder flange and the other end is designed to suit the die part, which in this case is the spider. A breaker plate or a connecting ring is fitted in between the extruder flange and the flange adapter; hence, the recess in the flange end is matched with the dimensions of the breaker plate. The in-between section of the bore is made to streamline the melt flow.

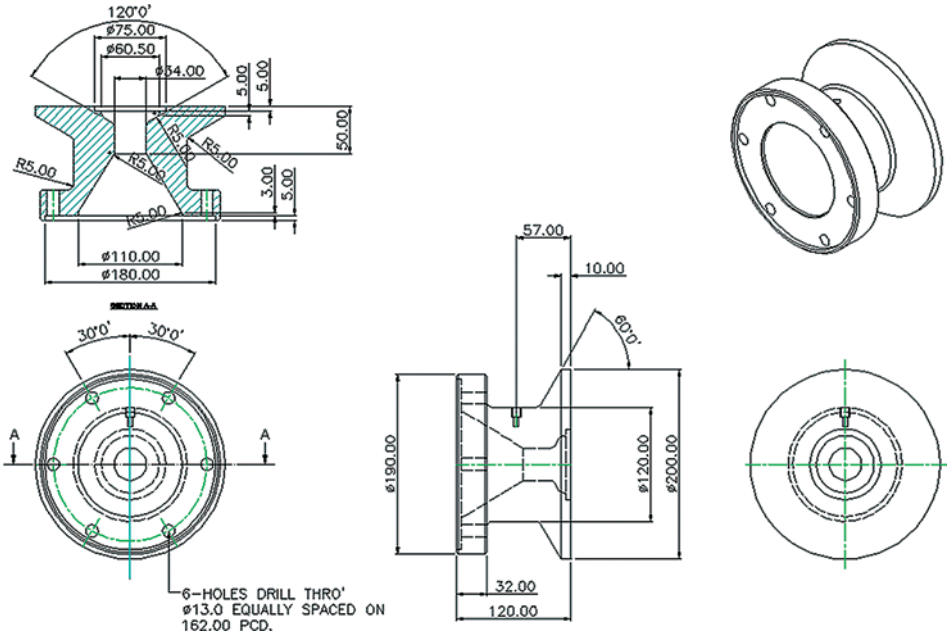

Figure 3.25 Detailed drawing of flange adapter

The drawings above will be found useful for the design of a similar die with slight modifications. They can also serve a useful purpose for simulating the flow through the die, as the dimensions required can be related to these drawings. The simulation of the flow through the die is covered in the next chapter.

3.11 References

[1] C. Hopmann, W. Michaeli, *Extrusion Dies for Plastics and Rubber*, 4th ed., C. Hanser Verlag, Munich, Germany (2016)

[2] P. C. Hiemenz, T. Lodge, *Polymer Chemistry*, 2nd ed., CRC, New York, NY (2007)

[3] Notes on *Tooling Design for Tubing*, by Chris Rauwendaal, Technical Consultant, B&H Tool Co.

4 Simulation of Melt Flow

In the last chapter, the design of a simple spider die was explained. This principle of design can be followed for designing dies of other sizes, but the dilemma of the die designer is whether the die will work or not. There are three methods of proving that the die works and of ensuring that its design is suitable for its purpose, as follows:

4.1 Experimental Approach

Die designers since the old days have been designing dies either from the experience they have gained over the years working practically on the extrusion lines; or, in some cases, reproducing the work of other designers. In any case, the design and manufacture of the die is followed by an experimental stage of "die trial and proving." In some companies, this task is carried out by specialist process engineers who have sufficient knowledge of polymer processing and product qualities. In other cases, the die designer may take the role of process engineer and work with the extrusion operators to see the end results.

If the end results are not what was expected, changes to the die components are made to iron out the problems. For instance, if the pressure drop through the die is high or low, normally the land length of the die bush and the pin is either increased or decreased as necessary. Similarly, if the product finish is rough due to shark skin effect, either the temperature is increased or different draw down ratios are tried. In some cases, this process of fault elimination can go on for several days, weeks, or even months in the case of complex dies. It may not be so long in the case of tube and pipe dies, but in the case of some complicated profile dies, it can be really time consuming when the velocities in different sections are to be matched to achieve a uniform melt flow in all sections.

The values of pressure drop through the die can be obtained by incorporating pressure transducers in strategic places, but the die designer or process engineer

cannot have a feel for the shear rate, shear stress, residence time, and velocities in the different sections of the die. It can be concluded that this approach is only a trial and error method and can be very time consuming and expensive, especially when it comes to large size pipe dies, coextrusion, and profile dies.

Perhaps it should also be mentioned here that it has been a common practice among the manufacturers of extrusion lines to solve the problems for the customer in-house, prior to supplying the complete production line. The cost of the die development in such case is charged as a part of the cost of the complete project and is never revealed to the customer. The real cost of the die development is only revealed when a die for a new product is made to fit existing equipment.

4.2 Mathematical Calculations of the Flow Characteristics

This approach is more scientific and engineering based. The only problem is that not all die designers are experts in physics and mathematics. These calculations need an understanding of the science of material flow behavior, in other words, the rheology of materials involving viscoelastic behavior, and of the thermodynamic properties of polymers, as well as the ability to perform complicated mathematical calculations. The main quantities to be calculated are the pressure drop through the whole die or a part of it, shear rate, shear stress, and residence time. The pressure drop is required to predict the performance of the die; an excessive pressure drop through the die can result in instabilities of the die. The shear rate is required to ensure that the melt is flowing through the die within permissible range. An excessive shear stress can result in defects in the finished product. Similarly, an excessive residence time can result in melt stagnation in the die and results in degradation of the melt, especially in the case of heat sensitive polymers like PVC.

The mechanical design of a simple spider die is explained in the previous chapter. To illustrate the calculations, the section 1 of the spider die in Figure 4.2 is considered and the dimensions of the channel in the land area of this die are taken from Table 3.3 in Chapter 3 for the pipe size of Ø40 mm with 3 mm wall thickness and DDR of 1.10 : 1. The dimensions of the die bush inside diameter (d_1 = Ø42 mm) and the pin diameter (d_2 = Ø35.70 mm) are also taken from Table 3.3 in Chapter 3. It is assumed that the land length is 15 times the annulus gap between the die bush and the pin, that is, 47.50 mm (see Figure 4.2). Information about the rheological data of the polymer is also required and is taken from rheometer readings for a certain grade of LDPE, as shown in Table 4.1.

Table 4.1 Viscosity-Shear Rate of LDPE at Three Temperatures

Temperature [°C]	Shear rate $\dot{\gamma}$ [s^{-1}]	Viscosity η [Pa·s]
190	61	1200
	214	571
	728	256
	2530	110
	8820	46
	30000	19
220	61	859
	214	431
	728	205
	2530	90
	8820	39
	30000	17
250	61	681
	214	327
	728	156
	2530	72
	8820	33
	30000	17

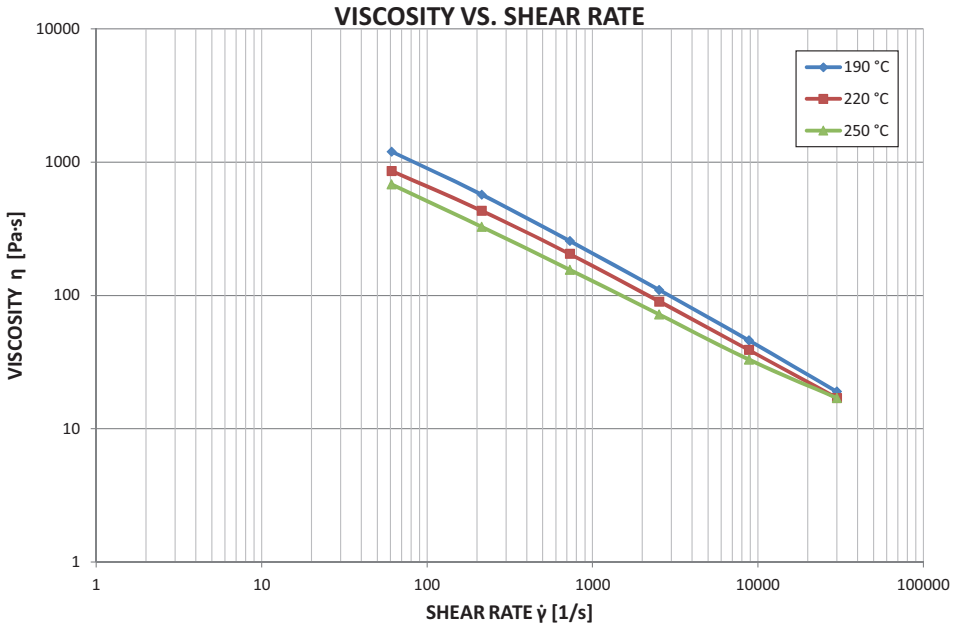

Figure 4.1 Plot of viscosity vs. shear rate for 3 temperatures on log scale

The formulae for the calculations of the pressure drop Δp [MPa] through the land section of the die are adapted from N.S. Rao's *Design Formulas for Plastics Engineers* [1] as follows:

$$\text{pressure drop } \Delta p = \frac{\dot{Q}^{1/n}}{K^{1/n} G} \tag{4.1}$$

where:

- $\dot{Q}$ [m^3/s] is the volume flow rate: $\dot{Q}$ = mass output/density
- G is a die constant
- K is a factor of proportionality
- $1/n$ is the power law exponent, the value of which is between 0.2 and 0.7 for most polymers and is obtained from the double log plot of shear rate and shear stress curve for a given temperature

The value of n (the power law exponent is a function of shear rate and temperature) and the value of K (the factor of proportionality is related to the shear rate, the shear stress, and the power law exponent) are given by the following equation:

$$K = \frac{\dot{\gamma}}{\tau^n} \tag{4.2}$$

where τ is the shear stress (in Pa = N/m^2) and the shear rate $\dot{\gamma}$ is given by:

$$\text{shear rate } \dot{\gamma} = \frac{6\dot{Q}}{\pi\left(R_o + R_i\right)\left(R_o - R_i\right)^2} \tag{4.3}$$

where:

- R_o = (1/2)×die bush inside diameter
- R_i = (1/2)×pin diameter

The value of the die constant G from the formula given in [1], for the annular section in this case, is $G_{annulus}$ and is given by:

$$G_{annulus} = \left(\frac{\pi}{6}\right)^{\frac{1}{n}} \times \frac{\left(R_0 + R_i\right)^{\frac{1}{n}} \times \left(R_0 - R_i\right)^{\frac{2}{n}+1}}{2L} \tag{4.4}$$

where:

land L = die gap×c

and c is a number that varies from 10 to 30, depending upon the die and the product type. In other words, the land length normally is minimum 10 times the die gap and maximum 30 times the die gap.

Supposing in this example that the output rate for the ø40 mm pipe is 50 kilograms per hour and the material is LDPE with a melt density of 750 kg/m^3, the value of volume flow rate $\dot{\boldsymbol{Q}}$ is as follows:

Mass output = 50 kg/h = 0.01389 kg/s

Melt density of LDPE = 750 kg/m^3

$\dot{\boldsymbol{Q}}$ = 0.01389/750 = 1.852 10^{-5} m^3/s

Using:

$\boldsymbol{R_o}$ = 21.00 mm = 0.021 m

$\boldsymbol{R_i}$ = 17.85 mm = 0.01785 m

and substituting these values in Equation (4.3):

$$\text{shear rate } \dot{\gamma} = \frac{6\times 1.852\times 10^{-5}}{\left(0.021+0.01785\right)\left(0.021-0.01785\right)^2}\text{s}^{-1} = 91.755\ \text{s}^{-1}$$

The corresponding viscosity η at shear rate $\dot{\gamma}$ = 92 s^{-1} can be ascertained from Figure 4.1 and is η = 873.13 Pa·s. Then, from Equation 2.1 in Chapter 2:

shear stress $\tau = \eta\times\dot{\gamma}$ = 873.13×91.755 = 80114 Pa

The value of the reciprocal of the power law exponent ($1/\boldsymbol{n}$) obtained from rheological calculations for the above LDPE is 0.3447 or $\boldsymbol{n} = 2.901$. Then, substituting these values in Equation (4.2):

$$\boldsymbol{K} = \frac{91.755}{80114^{2.901}} = 5.46\times 10^{-13}$$

Finally, considering:

$$\boldsymbol{L} = \left(0.021-0.01785\right)\times 15 = 0.04725\ \text{m}$$

in Equation (4.4):

$$\boldsymbol{G_{annulus}} = \left(\frac{}{6}\right)^{1/2.901}\times\left(0.021+0.01785\right)^{1/2.901}\times\frac{\left(0.021-0.01785\right)^{\frac{2}{2.901}+1}}{2\times 0.04725} = 0.000163217$$

The pressure drop Δp [MPa] can now be calculated by substituting the values from above in Equation (4.1) as follows:

$$\Delta p = \frac{\left(1.852\times10^{-5}\right)^{\frac{1}{2.901}}}{\left(5.46\times10^{-13}\right)^{\frac{1}{2.901}} \quad 1.63217\times10^{-4}} = 2.42 \text{ MPa}$$

Another parameter important to know is the residence time t for the melt in the channel of a given length. According to N.S. Rao's *Design Formulas for Plastics Engineers* [1], it is as follows:

$$\mathrm{t} = \frac{4\boldsymbol{L}}{\dot{\gamma}\left(\boldsymbol{R}_0 - \boldsymbol{R}_i\right)} \tag{4.5}$$

From above:

$\boldsymbol{L}$ = 0.0475 m

$\boldsymbol{R}_o$ = 0.021 m

$\boldsymbol{R}_i$ = 0.0175 m

$\dot{\gamma}$ = 91.755 s^{-1}

$$\mathrm{t} = \frac{4\times0.0475}{91.755\times0.00350} = 0.59 \text{ seconds}$$

Once the formulae are defined as above, calculations for other die sections of different dimensions can be done easily. The above example applies to the land area of the die and similar calculations can be done for other parts of the die, by dividing the die in various sections as shown in Figure 4.2. If the sections are conical instead of straight, an average diameter of the small end and the large end, and an average annular gap give a close approximation of the values. The accumulation of all the pressure drops through all the sections of the die is the total pressure drop. The process of the above calculations can be expedited by the use of Microsoft Excel® or similar spreadsheet programs as follows:

Any variation to the product size or the corresponding die dimensions would give instant results in the corresponding variables in Table 4.2. Table 4.2 shows the calculations for 5 different sizes of the tubes in the land section of the die for different rates of output and land lengths.

The values shown in the above calculations relating to shear rate, shear stress, residence time, and pressure drop serve a very useful guide for the die design, for the following reasons:

1. A low shear rate results in high residence time; the shear rate should not be lower than 10 per second
2. A high shear rate results in a high shear stress and a high pressure drop
3. A shear stress higher than 140 kPa causes melt fracture, resulting in the "shark skin" effect on the finished product
4. A high pressure in the die results in instabilities; therefore, the optimum pressure drop of 200 bar (20 MPa) should be aimed at for a good design
5. A high residence time can result in stagnation of the melt in some parts of the die section and can cause degradation of the melt in the case of heat sensitive materials

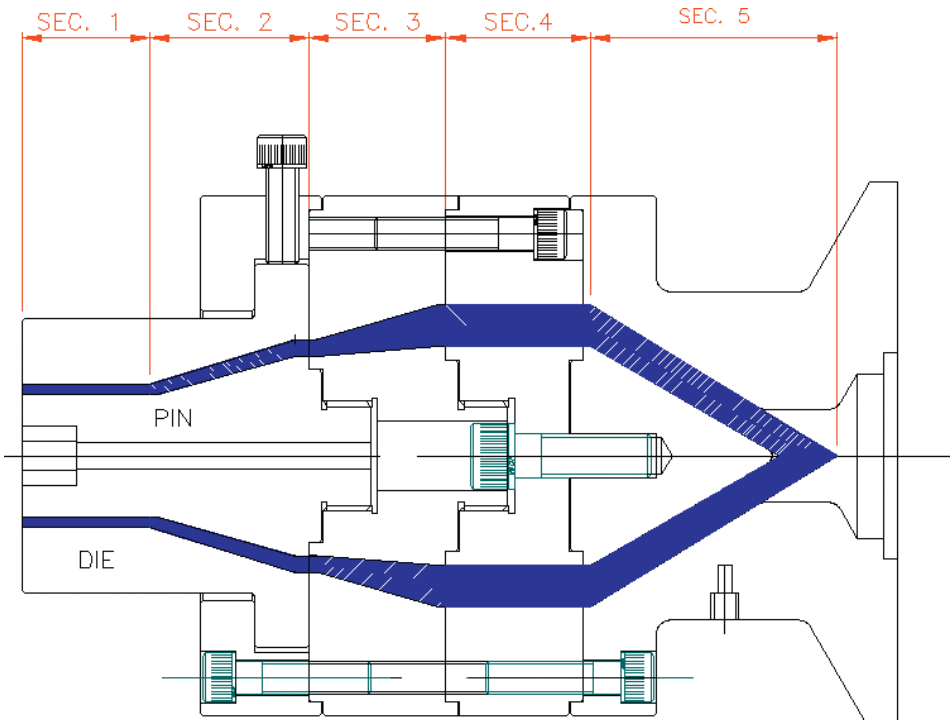

Figure 4.2 Profile of melt flow through spider pipe die

Table 4.2 Calculations of Shear Rate, Shear Stress, Die Constant *G*, Factor of Proportionality *K*, and Pressure Drop through an Annulus Channel

Product size [mm]	Specifications		Mass output [g/s] ([kg/h])[a]	Volume flow rate $\dot{Q}$ [10^{-5} m^3/s]	R_o = die radius [m]	R_i = pipe ½ ID [m]	Land *L* [m]	Shear rate $\dot{\gamma}$ [s^{-1}]	Viscosity η [Pa·s]	Shear stress τ [Pa]	Die constant $G_{annulus}$ [10^{-5}]	Factor of prop. *K* [10^{-13}]	Pressure drop [MPa][c]
	Die OD [mm]	ID [mm]											
				Mass output/ density[b]	OD/2	ID/2	Die gap×c (10≤c≤30)	Equation (4.3)	From Figure 4.1	$\eta \times \gamma$	Equation (4.4)	Equation (4.2)	Equation (4.1)
ø40	42.00	35.70	13.89 (50)	1.85	0.021	0.018	0.047	91.748	873.2	80114	16.4	5.46	2.40
ø50	52.50	44.73	16.67 (60)	2.22	0.026	0.022	0.06	57.841	1181.5	68339	20.5	5.46	2.05
ø32	33.60	28.56	13.89 (50)	1.85	0.017	0.014	0.038	179.195	563.13	100910	13.0	5.46	3.03
ø25	26.25	22.26	8.33 (30)	1.11	0.013	0.011	0.02	219.822	492.6	108284	7.86	5.46	4.21
ø20	21.00	17.85	5.56 (20)	0.74	0.011	0.009	0.019	293.593	407.5	119639	6.06	5.46	4.74

[a]: 1 kg/h = 1000/3600 g/s
[b]: Melt density considered: 750 kg/m^3
[c]: Power law exponent n considered: 2.9

If the designer has the essential attributes, material information, and the time it takes to perform the calculations, considerable plant time and production resources can be saved in proving the die and in the die modifications. It must be borne in mind that this approach cannot eliminate the final "die trial and proving" for production.

The problem is exacerbated when the die is designed for processing a wider range of polymers of different rheological and thermodynamic properties. The design of a die with this approach has the following problems, as can be seen from the example above:

1. It involves complicated mathematical calculations requiring expert knowledge and understanding of mathematics
2. Understanding of physics is essential
3. Expert knowledge of rheology of the melt flow is required
4. Availability of rheology data, consisting of physical and thermodynamic properties of each polymer used for the particular die, is essential
5. The understanding and computation of the values of the constants used in the calculations is not easy
6. The time factor—it can take days and even weeks to calculate some complicated dies. Even then, the values calculated are only approximate.

In view of the above, the computer simulation approach is much preferred by most of the die designers these days.

4.3 Computer Simulation

Advances in the development of powerful computer software and proficient numerical techniques have made it easy to simulate, analyze, and optimize die geometries, as well as the behavior of non-linear and viscoelastic polymers. As a result, extrusion variables such as the melt flow velocities, shear stress, shear rate, pressure drop, temperature variations, residence time, etc. can be easily established.

These days there are commercial FEM computer simulation programs available on the market for such calculations. Simulations require input data concerning the following:

1. **Geometric model of the die:** Similar to the one shown in Figure 4.2. Here, an example of a simple spider type of die is taken and the die is divided into 5 sections. In the case of other types of dies, different sections would have different geometry profiles. The die designers can design a die based on the product in-

formation and their own experience, as explained above. So, the input data can be taken from the preliminary design of the die and changed after the simulation results accordingly.

2. **Rheological properties of the polymer melt:** Relationships of different shear rates and the corresponding viscosities of polymers at different temperatures are either obtained from the manufacturers' literature or by testing a sample of the particular grade of the polymer in a laboratory using a rheometer.
3. **Thermodynamic properties of the polymer melt:** The density, specific heat capacity, and thermal conductivity are generally obtained from the material manufacturers' literature. If no information is available from the manufactures' literature, this data can also be obtained from a laboratory.
4. **Processing conditions:** Conditions such as the melt input temperature, mass flow rate, and die wall temperature are also required. The mass flow rate is related to the optimum production output in kilograms per hour required by the customer. Guidance regarding the melt temperature and the die temperature is obtained from the material manufacturers' literature.

Some practical illustration of simulation programs is essential to appreciate the use and benefits of these programs for analyzing and optimizing the flow behaviors of polymers through die geometry. One of these commercially available programs by Compuplast®, known as Virtual Extrusion Laboratory™, is used here for illustration. Different modules of the software are available for different applications and die designers can choose the module that suits their required application. A common module to all programs is the "Material Properties Module," because material properties like the rheological and thermodynamic ones are required for all types of simulations of melt flow applications. The "Material Properties Module," previously known as "Rheology Tools Module," has many functions to handle material data and perform some flow analysis.

It was mentioned in the Design Brief section in Chapter 3 that one of the requisites of die designing is to obtain the rheological and thermodynamic properties; some use of these properties for die designing was explained in Section 4.2, on Mathematical Calculations.

Further use of the rheological and thermodynamic properties for the simulation of flow analysis in relation to die design is explained with help of the "Material Properties Module" in the Virtual Extrusion Laboratory™. More information on Virtual Extrusion Laboratory™ can be obtained from the Compuplast website, *www.compuplast.com*.

Supposing that the material to be used in the design brief in Chapter 3 was LDPE and the rheology data supplied by the customer was as shown in Table 4.1: using the above mentioned software, first of all, the values of shear rates and viscosities at 3 different temperatures are put into the program along with thermodynamic

properties to build the material data, which the program saves in a database of materials. The program generates shear rate versus viscosity curves, similar to the ones shown in Figure 4.1. Figure 4.3 shows these curves generated by the program. The crosses in Figure 4.3 represent the apparent points and the straight lines show the true values corrected by the program. Furthermore, by the insertion of thermodynamic properties in the program, the software calculates the values of constants like ***n*** and ***K*** mentioned above, using a set of formulae imbedded in the software. Hence, a lot of the time spent on plotting the values in graphs and other calculations is saved by the software.

The values of the thermodynamic properties required by the program are as follows (in this example):

1. Solid properties:

a) Melting temperature T_m = 110 °C

b) Freezing temperature T_f = 90 °C

c) Density ρ = 924 kg/m^3

d) Specific heat capacity C_p = 2300 J/kg/°C

e) Thermal conductivity k = 0.2800 W/m/°C

f) Specific heat of fusion H_f = 130 kJ/kg

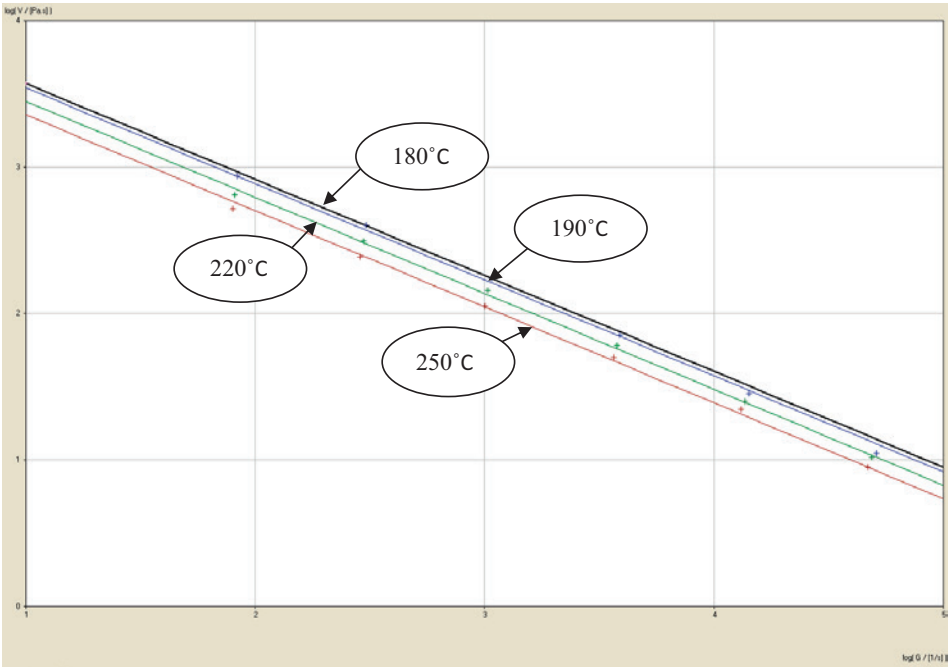

Figure 4.3 Apparent and true shear rate vs. viscosity values

2. Melt properties:

a) Density $\rho = 750\ kg/m^3$

b) Specific heat capacity $C_p = 2300\ J/kg/°C$

c) Thermal conductivity $k = 0.2400\ W/m/°C$

These values of rheological and thermodynamic properties form the basis of the melt flow simulation in these programs. Now it can be shown that the calculations, which are performed in such a lengthy way analytically, can be performed in a few minutes with the help of the software by the input of the die geometry, as shown in Figure 4.4.

Figure 4.4 shows the results of a simulation for an annular channel of Ø42.00 mm OD, Ø35.70 mm ID, and a land length of 47.50 mm, using the material data for LDPE used in the above section. The melt flow rate (output) is 50 kg/h and the material and die temperatures are 200 °C. As can be seen, the information provided by this method is a lot more than manual calculations. The useful data for decision making for the die design is:

- Pressure drop: 2.4826 MPa
- Shear rate: 142.34 s^{-1} on the outside and 142.34 s^{-1} on the inside
- Shear stress: 80.873 kPa on the outside and 8.557 kPa on the inside
- Residence time in the land region is 0.9861 seconds

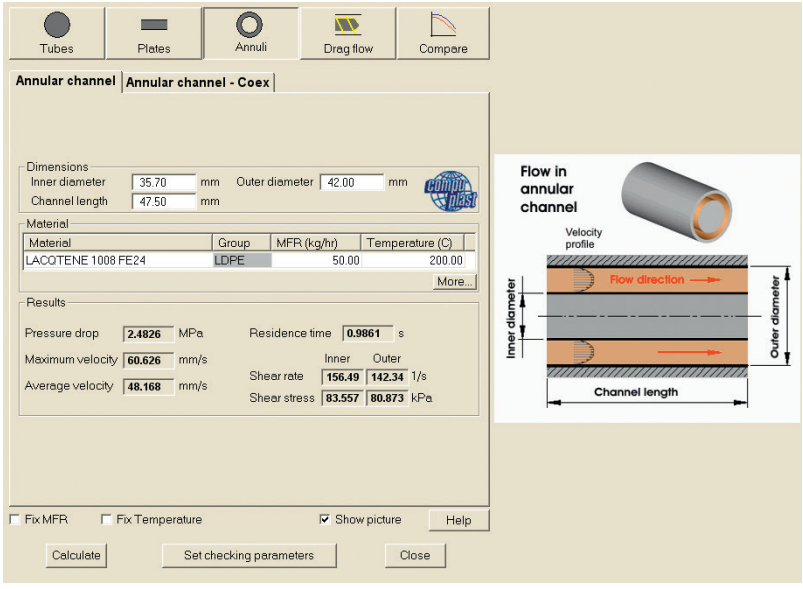

Figure 4.4 FEM simulation results obtained from extrusion calculator of Compuplast® [2], Ø40 mm tube with 50 kg/h output and melt temperature 200 °C

With the use of simulation software, the results for all different sizes of the tube in the product range can be obtained very quickly by changing the dimensions input into the program, and instant design changes can be made to suit these results. For instance, it can be used to check that the die design will be suitable for the largest size in the range, ø50 mm pipes, which has the inside die bush diameter of 52.50 mm, a pin diameter of 44.73 mm, and a land length of 58.30 mm with an output rate of 60 kg/h. The results can be obtained very quickly by inserting these values in the program, as shown in Figure 4.5.

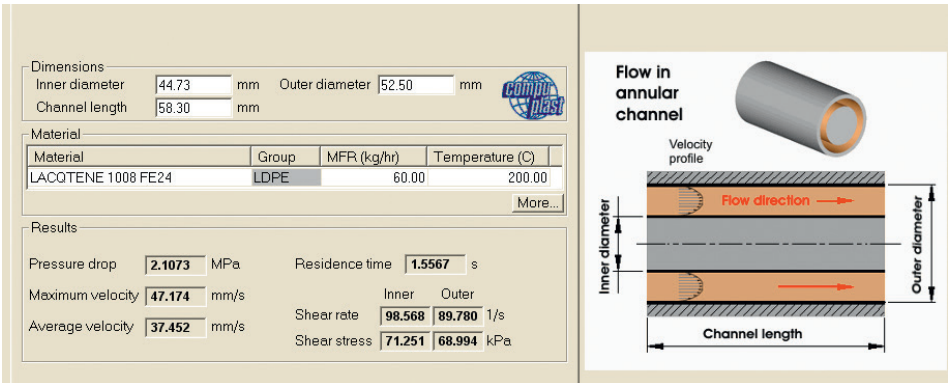

Figure 4.5 FEM simulation results obtained from extrusion calculator of Compuplast® [2], ø50 mm tube with 60 kg/h output and melt temperature 200 °C

It can be seen from the results in Figure 4.5 that there are small differences between the pressure drops, shear rates, and shear stress values calculated in Section 4.2 and the simulation results. This is mainly due to the correction factors applied to the data by the simulation programs, which are extremely complicated for analytically calculated results. The whole idea is to show different approaches to getting the necessary information for the purpose of die design that will work closer to the real situation. From experience it can be said that none of the approaches are 100 % accurate, since there will always be some variation in obtaining the data, in design parameters, and processing conditions.

There is no doubt that the computer aided programs of FEM simulation have made die design much easier, they save a lot of time for the die designers, and the die designers do not have to be experts in mathematics, physics, rheology, and many more disciplines. Still they have to learn the use of these programs and have to have a good understanding of what is involved in the processing of plastics. The cost and availability of these simulation programs is a different problem. For instance, there are many mold flow programs on the market for injection molding mold design, but the choice for extrusion is very much limited. A justification of

the cost of simulation programs can also be difficult, unless the number of dies to be designed is large enough to support this type of cost.

Many companies in the past thought it was a good idea to license FEM simulation programs and then found afterwards that they could not afford to have a full time die designer to utilize these programs. Therefore, many would prefer to leave the job of die designing to the expert die designers, who cater for a large number of companies and can justify the cost of these programs.

In the following chapters, examples of detailed die design for common size products will be given for the benefit of the extrusion engineers. Many of these examples have already been proven in practice and can be adapted for the manufacture of dies for similar applications, with slight modifications to suit the processing materials and equipment.

4.4 References

[1] N.S. Rao, *Design Formulas for Plastics Engineers,* 2nd ed., C. Hanser Verlag, Munich, Germany (2004)

[2] FEM simulation results from Flow 2000™, by Compuplast®

5 Spiral Die

So far, only the spider type of die has been discussed, for the purpose of an introduction to die design. In recent years, the spiral mandrel dies have replaced the old-fashioned spider dies for many applications.

Spiral mandrel distributors have been used since the 1950s, initially for the extrusion of blown film, and then have been adopted for the extrusion of tubes and pipes. In recent years, spiral mandrels have replaced the coat hanger and fish tail type of distributors in side-fed wire and cable covering and coating dies, because of their superiority in fine distribution of the melt around the circumference. Outstanding results are achieved with spiral mandrel distributors for these products in terms of a uniform volume flow and product wall thickness with no weld lines to affect the product quality. Spiral mandrel distributors are also ideal for the coextrusion of different types of polymers into single annular products to enhance their properties and functionality. Listed below are some of the advantages of the spiral mandrel distributor dies over other types of die distributors:

- Low pressure losses
- Low residence times
- Predictable shear stresses to avoid melt deposits at the die walls and avoidance of melt fracture
- Uniform elastic deformation
- Minimal interfacial instabilities in coextrusion
- No dead spots to cause material degradation
- Short color change and material change times
- Uniform temperature in the die and melt
- Minimal melt redistribution
- Die rigidity
- Minimal die leakage
- Tight mating lines

In the spider die shown in Figure 4.2 in Chapter 4, the sections 3, 4, and 5 are part of the melt distributor. In these sections, the melt is distributed around the gap between the outer and the inner parts of the die, before being pushed through section 2, the convergent section, and section 1, the die land. In the case of a spiral mandrel die, the spiral mandrel and the body are the main parts of the melt distributor for a uniform annular flow of polymer melt. Sections 1 and 2 are the same or almost the same as in the case of a spider die, for all types of mono and multilayer annular dies for the pipes and tubes. In the case of wire and cable covering and coating dies, the pins or mandrels are hollowed for the coating media to pass through.

5.1 Operating Principle

Figure 5.1 shows the main parts of the spiral mandrel die. The die illustrated in the following example is the same as illustrated in Chapter 3—namely, the ⌀20–50 mm pipe die. The only difference is that the melt distribution part of the spider die is replaced with the spiral mandrel and the die body. The front two parts (i. e., the die bush and the pin or inner mandrel) are the same as in Chapter 3. The rear flange adapter, which connects to the extruder, is modified to suit the melt flow into the spirals through equally distributed holes. The polymer and output rates for the design illustration are kept the same as in the previous example. As the spiral mandrel section dominates the operating function, the design criterion begins with the spiral mandrel.

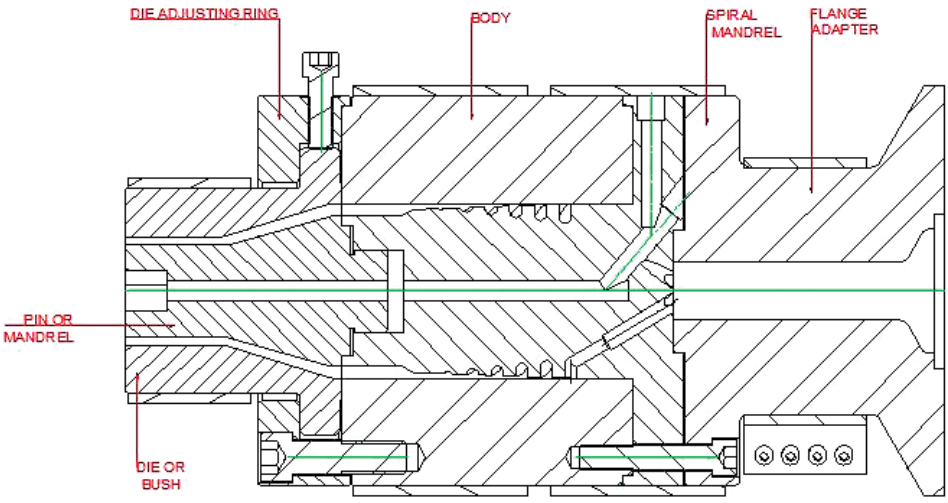

Figure 5.1 Monolayer spiral die for pipes up to ⌀50 mm

In this example, the spiral mandrel has six grooves equally distributed around the circumference and machined in a spiral form similar to multiple thread cutting. The spirals start with a predetermined depth, which reduces to almost nothing at the end of the spiral height. Because of this special feature of the spirals, a more sophisticated CNC (Computer Numerical Control) milling is used instead of a lathe, as in the case of multiple thread cutting.

The polymer melt enters the spiral grooves from the flange adapter through angled holes, which are equally distributed. This arrangement forms a star-shaped pattern as shown in Figure 5.2. The mandrel diameter has a tight fit into the body to the middle of the start of the spirals and then tapers to the end of the spiral. Due to this taper, there is a gradually increasing gap to the end of the spirals. The combination of the increasing gap between the body and the mandrel and the decreasing depth of the spirals in the extrusion direction divides the melt into two streams: one flows in the axial direction over the land between the spirals and the other flows in the helical direction of the spirals. Because the depth of the spirals diminishes towards the end, the resultant melt flow is only in axial direction, as shown in Figure 5.4. Consequently, there are no weld lines; therefore, a homogenous annular melt flow—as shown in Figure 5.3—and a uniform melt temperature are achieved. The complete elimination of weld lines and flow marks is the biggest advantage of the spiral distribution.

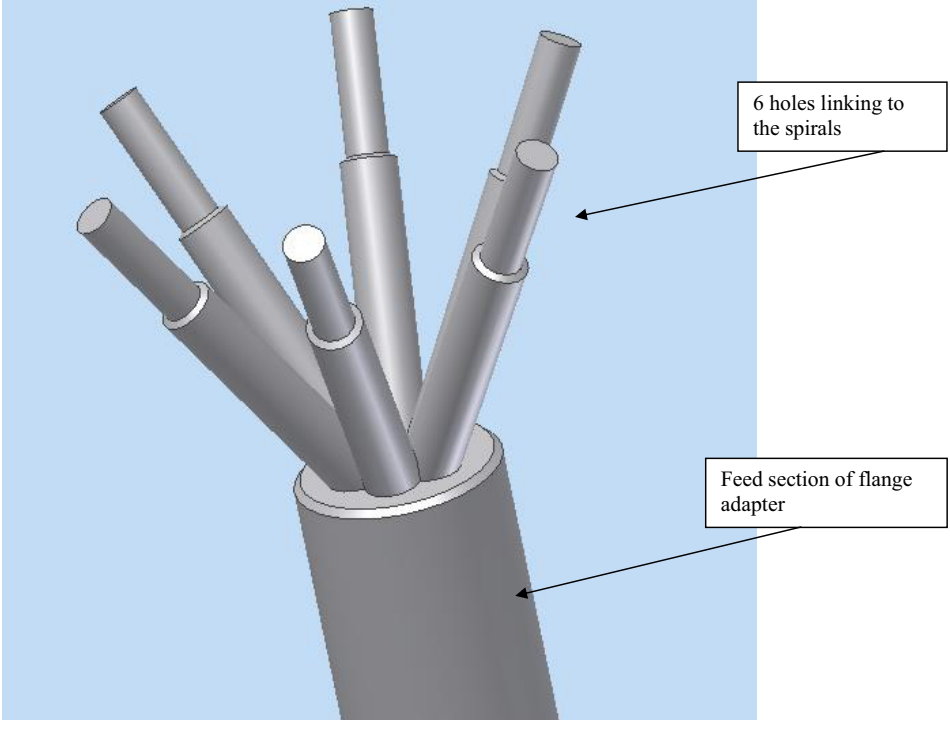

Figure 5.2 Star-shaped melt distributing system for the spirals

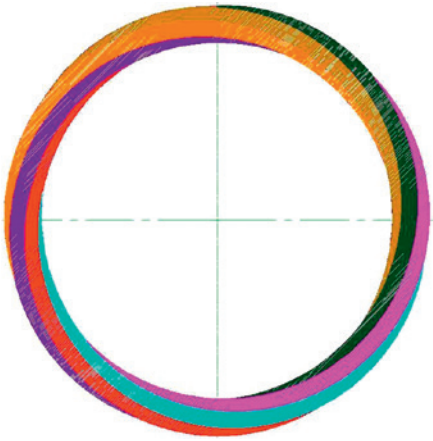

Figure 5.3 Annular melt flow at the end of spiral mandrel

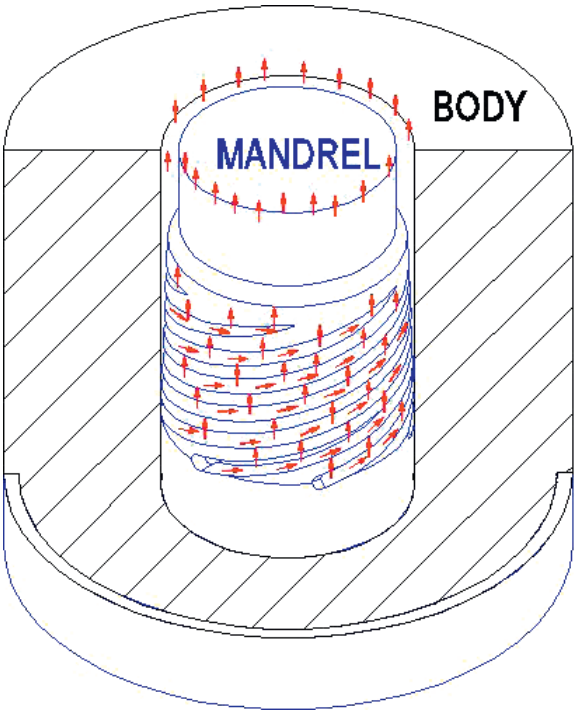

Figure 5.4 Illustration of melt flow through the spiral mandrel and body

5.2 Design of Spiral Die

For the design of any extrusion die there are a number of steps involved. The first step is to draw a rough sketch, either from experience or from previous examples; something closely resembling to the required die. The second stage is the verification of the design by either mathematical calculations or using computer simulation software. The third stage is to correct the design in line with the calculations or simulation results.

In the case of the spider die considered in Chapter 3, the die was designed from experience and according to the design brief of a particular customer. In the second stage, some mathematical calculations were performed to verify that the design would fulfil its purpose. It was suggested that any necessary changes should be made to the die geometry to suit the calculated or simulated results. It was also seen that the calculations were very complicated and time consuming. There were also difficulties in obtaining some of the exact information necessary for the calculations. For this reason, it was suggested that, in this day and age, it is an utter wastage of time to perform such calculations when there are computer simulation programs available on the market to save a lot of the design time and to give more predictable results than the long hand calculations.

The calculations of the spiral mandrel flow characteristics are even more complicated than for the simple spider die, because of the melt flow being bidirectional (i. e., axial and helical). As it was previously mentioned, such complicated calculations are the job of multidisciplinary academics. In real life, it is beyond the scope of the normal die designing. Therefore, no attempt will be made to perform such complicated calculations here. The simulation approach of using the known software Virtual Extrusion Laboratory™ by Compuplast® will be implemented to achieve the result. For this reason, the die geometry can be divided into two parts: (a) A mechanical part, necessary for the general design and for manufacturing purposes, which is related to the physical size of the die and its connectivity to other parts. (b) The second part of the design geometry is related to the melt flow through the die and the requirements of information necessary for the simulation software. The detailed drawings have the combined information of both parts of the geometry.

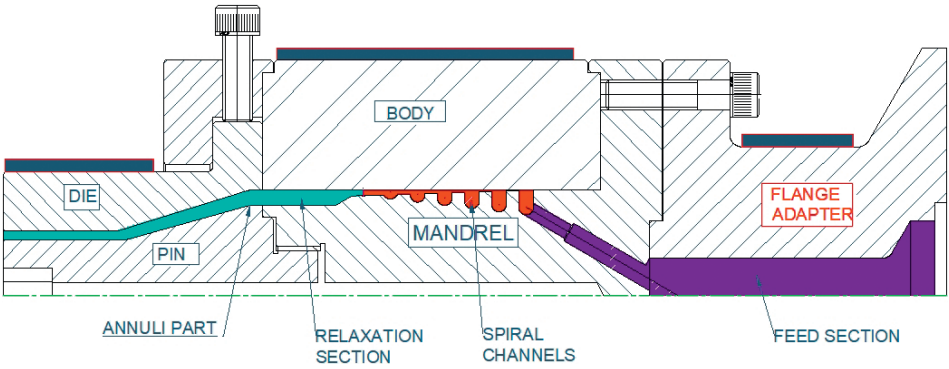

Figure 5.5 Die sections

The complete die is divided in three parts according to the software, as shown in Figure 5.5:

1. The feed system, which consists of the melt flow path from the flange adapter to the feeding of the spirals (e. g., the star-shaped feed system described above) or, alternatively, the ring feed system used in the side-fed dies or crosshead dies, which will be described later
2. The spiral section, which consists of the body, mandrel, and the channel parameters
3. The annuli (as termed in the above mentioned software), the section after the spirals to the die exit, which consists of the relaxation part above the spirals and the tooling section of the die bush and the mandrel

In Chapter 3 it was explained that the starting point of the die design is from the front part of the die and not from the extruder end. As a result, the tooling part of the die—namely, the die bush and the pin or inner mandrel—is taken as designed and detailed in Figure 3.3 in Chapter 3. The next section after the tooling section is the distributor. In the case of spiral dies, the spiral mandrel and the body are the distributor; therefore, the design of the spiral mandrel and the body (the spiral section) will be defined below. In the design of the spiral section there are three main parts to be considered: the body, the mandrel, and the channel.

5.2.1 Die Body Geometry

From a design point of view, the most important dimension of the body is the reference diameter, as given in Figure 5.6. All the other diameters are related to this diameter. The drawing in Figure 5.6 shows a cylindrical body; therefore, the reference diameter is the same throughout. In the case of a tapered body (explained in Chapter 7 onwards), the diameters in the front and the back of the body are diffe-

rent to the reference diameter. The diameter in the front of the body is always set to match the end diameter of the die bush for a stepless transition of melt from the body to the die bush. The taper in the body is formed by the difference in the reference diameter and the front diameter. This taper is continued to the back of the body, to create a sealing taper between the mandrel and the body. The reference diameter on the mandrel corresponds with the mid-points of the start of the spirals on the mandrel.

The second dimension of the body is the height, which normally is determined from the mandrel. It is not necessary, but convenient, to make the height of the body such that the front of the mandrel and the body are in line.

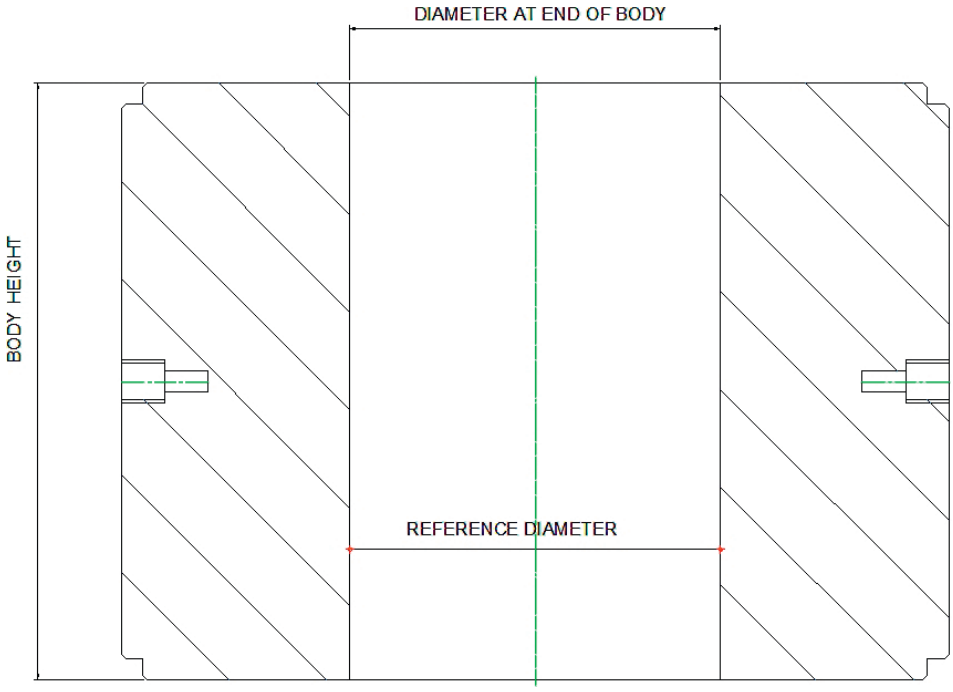

Figure 5.6 Spiral die body

5.2.2 Spiral Mandrel Geometry

The important dimensions for the geometry of the mandrel are:

1. **Reference diameter:** as described above for the body.
2. **Mandrel height:** The mandrel height is the total length of the mandrel, as shown in Figure 5.7, and it consists of a flange part, a tapered part (can be a parallel part) between the flange and the start of the spirals, the spiral section, and the section after the spirals to the mating surface with the pin.

3. **Sealing section:** As shown in Figure 5.7, this is the part of the mandrel before the start of the spirals. This part of the mandrel is made to closely fit into the bore of the body so that the melt in the spirals under pressure does not leak back from the spirals. In the case of a parallel bore of the body and a parallel part of the mandrel, the sealing is achieved by grinding the two surfaces to close tolerances. In the case of a tapered mandrel and a tapered bore of the body, the sealing is achieved by a close fit of the two parts on the taper, as shown in the example of the die in Figure 7.1 in Chapter 7 and chapters after that. The length of this section is usually 30–50 mm.

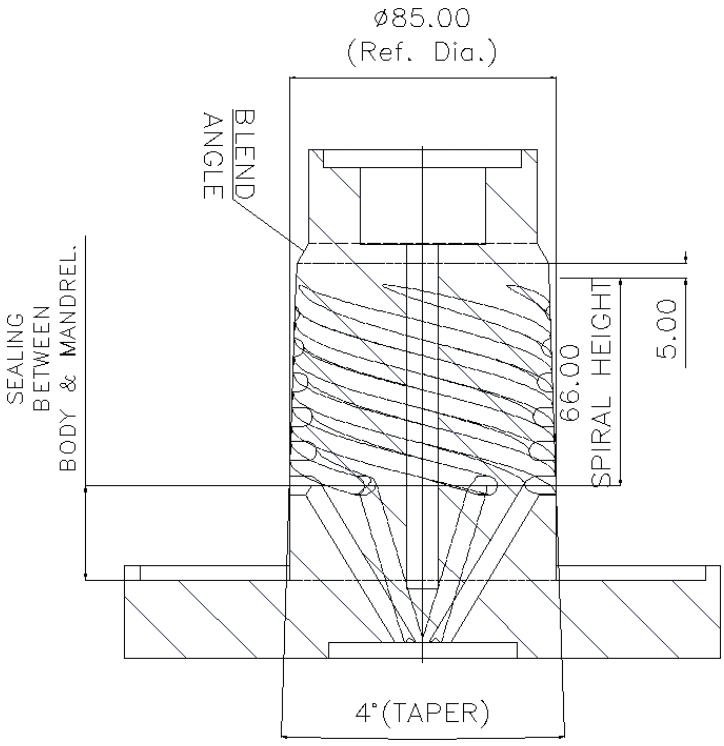

Figure 5.7 Spiral mandrel

4. **Spiral height:** The spiral height is the distance from the middle of the start of the spiral to the middle of the end of the spiral. It is determined from the number of overlaps and the gap between each overlap. Another way to define this distance is the distance between the channels times the number of channels when the number of channels is the same as the number of overlaps. As shown in Figure 5.7 and Figure 5.8, the spiral height of 66 mm is 11 mm (the distance between channels) times 6 (the number of channels), as the number of channels is the same as overlaps (i.e., 6).

5. **Relaxation section:** This is a section immediately after the spiral mandrel distribution system. In this section, there is a bigger gap between the mandrel and the body than the gap at the end of the spirals. As the name implies, the relaxation section—sometimes called relaxation chamber—is intended to allow the stresses created by the movement of the melt through the spirals to be relaxed. The outside diameter of this section is the inside diameter of the body and the inside diameter is to match with the diameter of the pin, as shown in Figure 5.1. The dimension of 5 mm at the end of the spirals is meant to allow the taper on the mandrel to run out beyond the spirals, and the angle at the end of this, purely to blend one section into the other.

5.2.3 The Spiral Geometry

The third important part of the spiral mandrel design is the channel or spiral geometry. Figure 5.8 shows the features required, as follows:

1. Channel width: The radius at the bottom of the channel forms the width of the channel, as the channels are cut with a ball nose tool to ensure a smooth flow of melt in the channel without any dead spots. The width and the depth of the channel influence several characteristics like the output required, the pressure drop, the shear rate, the shear stress, etc. The wider the channel, the higher the output, lower the pressure drop, lower the shear rate and the shear stress, and higher the residence time. Wider channels also mean a longer mandrel for the same number of overlaps. The reverse is true for narrow channel widths. Therefore, the channel depth must be selected sensibly. Normally the width of the channel is selected from the standard size of the cutting tools available, such as ⌀6 mm, ⌀8 mm, ⌀10 mm, etc.

2. Channel depth: The channel depth has a similar influence on the design geometry as the width and normally both work in combination to influence the output rate, pressure drop, melt shear rate, shear stress, and melt residence time in the channel. In other words, deeper channels hold more melt in them, which requires a longer channel to disperse the melt smoothly. The influence of the channel width is further explained in the die simulation section, later in this chapter.

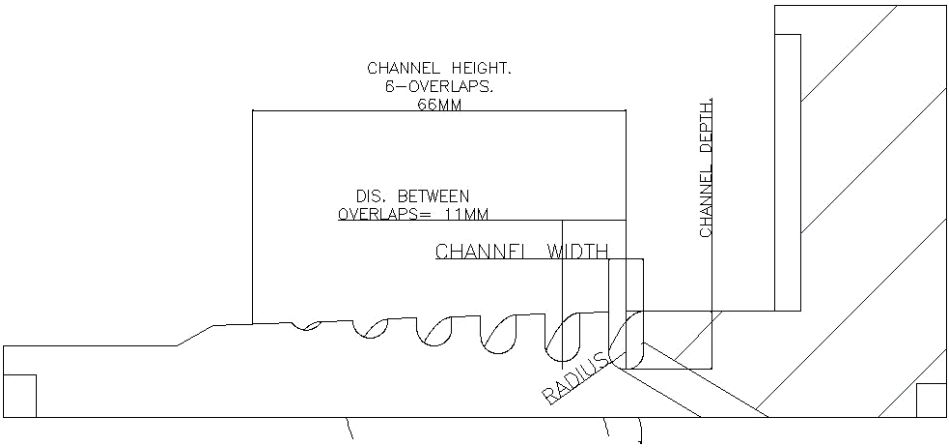

Figure 5.8 Spiral or channel geometry

3. Number of channels: At the design stage, the designer has to decide upon the number of channels around the circumference. For most practical purposes, 4 channels is the minimum number for small dies and 10 to 12 channels the one for large dies. The larger the number of channels, the finer is the melt distribution. It is not practical to have a large number of channels in a small mandrel, because the distance between the channels would be very small and the channels can break into one and another, or the length of the mandrel will get unnecessary too long. So, as a rule of thumb, 4 channels for mandrels up to 40 mm in diameter, 6 channels in mandrels of 40 mm to 150 mm and 8–10 channels up to 300 mm diameter mandrels work satisfactorily. For side-fed dies, an odd number of channels is more practical, so that the starting channel is opposite the feed point. In this way, 2 channels close to the feed would be at equal distance from the feed point.

4. Number of overlaps: Normally, channels are designed to complete a turn around the circumference, which results in the number of overlaps equal to the number of channels. This rule is relaxed for large dies with a large number of channels, where each channel makes a part of the whole turn. In this case, the number of overlaps can be calculated as follows:

$$\textit{no. of overlaps} = \frac{\textit{angle of each spiral} \times \textit{no. of channels}}{360^\circ} \tag{5.1}$$

For example, if each channel goes through 270° and the number of channels is 8, then:

$$\textit{no. of overlaps} = \frac{270^\circ \times 8}{360^\circ} = 6$$

Figure 5.9 shows an unwrapped view of the spirals of the mandrel discussed above for a 6 start spiral and 6 overlaps. A section taken through a spiral shows the way the depth of the spiral is diminishing towards the end and the gap between the body and mandrel is increasing from the start of the spiral to the end.

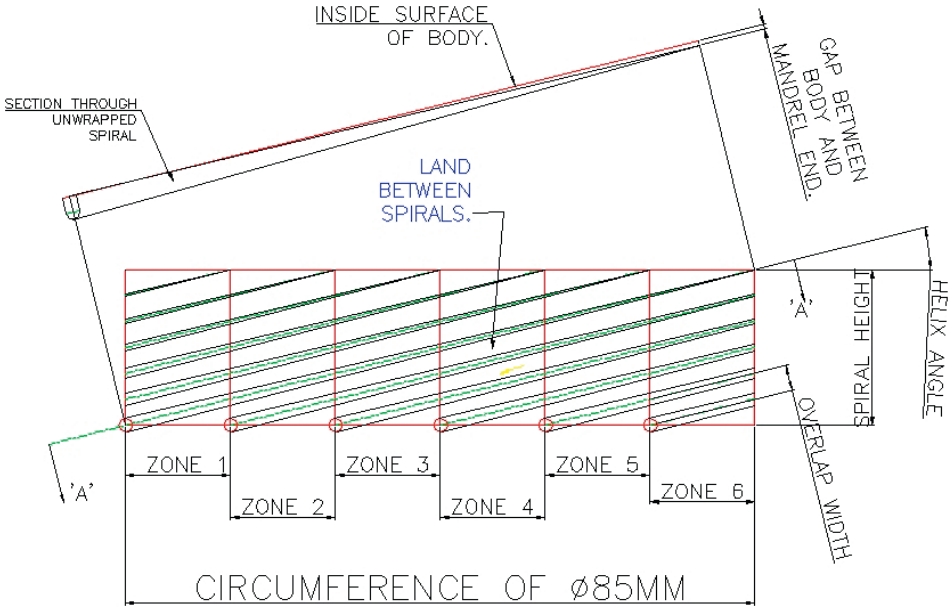

Figure 5.9 Unwrapped view of spiral mandrel showing 6 starts and 6 overlaps

5. Die gap: This is the gap between the spiral mandrel and the body at the end of the spirals. This gap governs the amount of melt leakage from the spirals. A bigger gap would result in more leakage from the spirals, which would be required for higher outputs. For a low output, a large gap would result in early leakage of melt from the spirals, which would mean that the spirals are not doing the job they are designed for. Early leakage would also result in a poor melt distribution around the circumference of the spiral mandrel and a lower pressure in the system. Therefore, it is important to have the correct gap, which can only be established with a simulation of the die and is shown in the following sections.

5.3 Material Information

Having defined the die geometry, the next important consideration is the polymer to be used. Each polymer and its grades are different in their processing behavior. Many polymer grades may look similar in properties, but behave differently during processing and can cause unexpected results. Therefore, it is important to get as much information on the polymers as possible. Film dies are generally made for more specific polymers, whereas pipe and tube, coating, and cable covering dies are made for a number of similar polymers and grades of the same polymers. Some product manufacturers expect a die to run with any polymer, due to a lack of understanding of the polymer characteristics that influence the performance of the die.

From a processing point of view, the most important physical properties of a polymer are the shear viscosities at different shear rates and temperatures, as was shown in Chapter 4. This information is sought at the beginning of the design. Also, the information about thermodynamic properties such as density, specific heat capacity, thermal conductivity, freezing temperature, melting temperature, and specific heat of fusion is required for each polymer for which the die is being designed. The rate of output from the die is usually limited by the processing equipment, firstly by the extruder and then by the downstream equipment.

Once all this information about the rough die design and materials to be processed is available, then the next stage of mathematical modelling or simulation can start. As already iterated, a mathematical approach is beyond the scope of a normal die designer; therefore, the simulation approach is adopted, as follows.

5.4 Die Simulation

As said above, simulation software called “Spiral die” from Compuplast® Virtual Extrusion Laboratory™ is used for simulating the functioning of the rough design of the ⌀20–50 mm die described above. The first requirement by the software is the “die definition,” which consists of the body, the mandrel, the channel, the section above the spirals called annuli, and the feed section named tubes. The dimensions for each of these sections from the die in Figure 5.1 are taken as follows:

5.4.1 Body Geometry

The dimensions of the body inserted in the software are shown in Figure 5.10 and in Table 5.1.

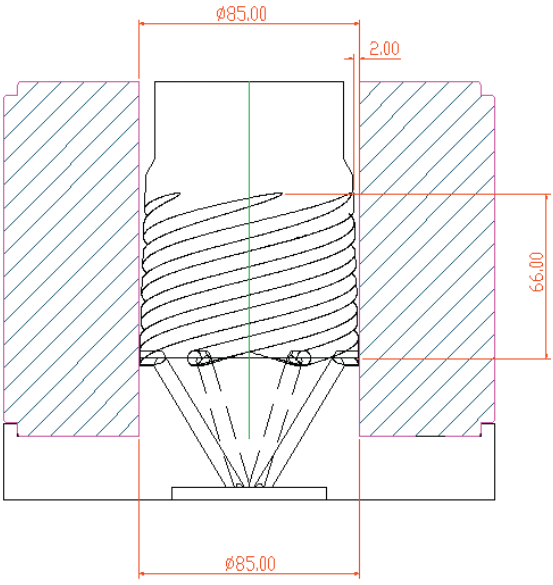

Figure 5.10 Body dimensions

Table 5.1 Body Geometry

a.	Reference diameter	85.00 mm
b.	Mandrel height	66.00 mm
c.	Die gap at the beginning of spirals	0.05 mm
d.	Die gap at the end of spirals	2.00 mm

5.4.2 Mandrel Geometry

The dimensions for the mandrel taken from the die are inserted into the software as show Figure 5.11 and Table 5.2.

Table 5.2 Mandrel Geometry

a.	Reference diameter	84.90 mm
b.	Mandrel height	66.00 mm
c.	Die gap at the beginning of spirals	0.05 mm
d.	Die gap at the end of spirals	2.00 mm

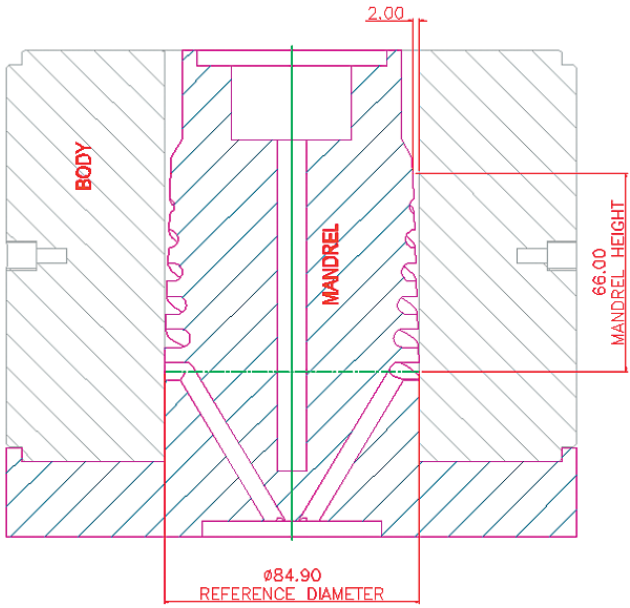

Figure 5.11 Mandrel dimensions

5.4.3 Channel Geometry

The dimensions of the channel, along with the number of starts and the number of overlaps, are inserted into the software as shown in Figure 5.12 and in Table 5.3.

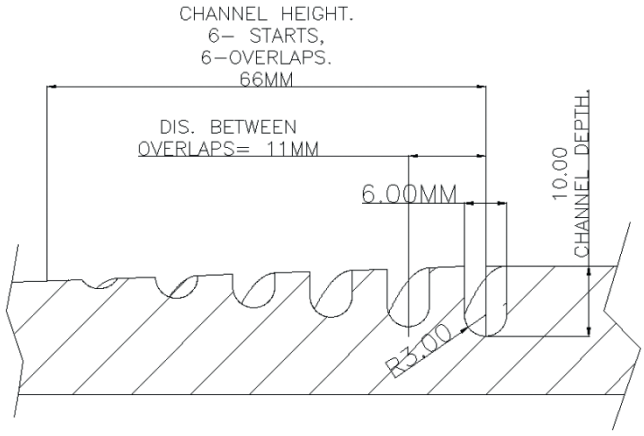

Figure 5.12 Channel dimensions

Table 5.3 Channel Geometry

a.	Number of channels	6
b.	Number of overlaps	6
c.	Channel width	6 mm
d.	Channel radius	3 mm
e.	Channel depth at the beginning	10 mm
f.	Channel depth at the end	0.05 mm

5.4.4 Feed Section

The next section for geometry definition is the feed section, because the feed section and the melt distribution section defined above will form permanent parts of the die, whereas the tooling section will vary according to the size of the pipe or tube to be produced. For in-line spiral dies, this section is divided into two parts. The first part is the straight section taking the melt from the extruder and distributing it to star shaped holes, as shown in Figure 5.2. In some cases, the holes are stepped to reduce the pressure consumption in them; in which case the feed section is divided in three parts. The geometry of these parts is the diameters and lengths as shown in Figure 5.13.

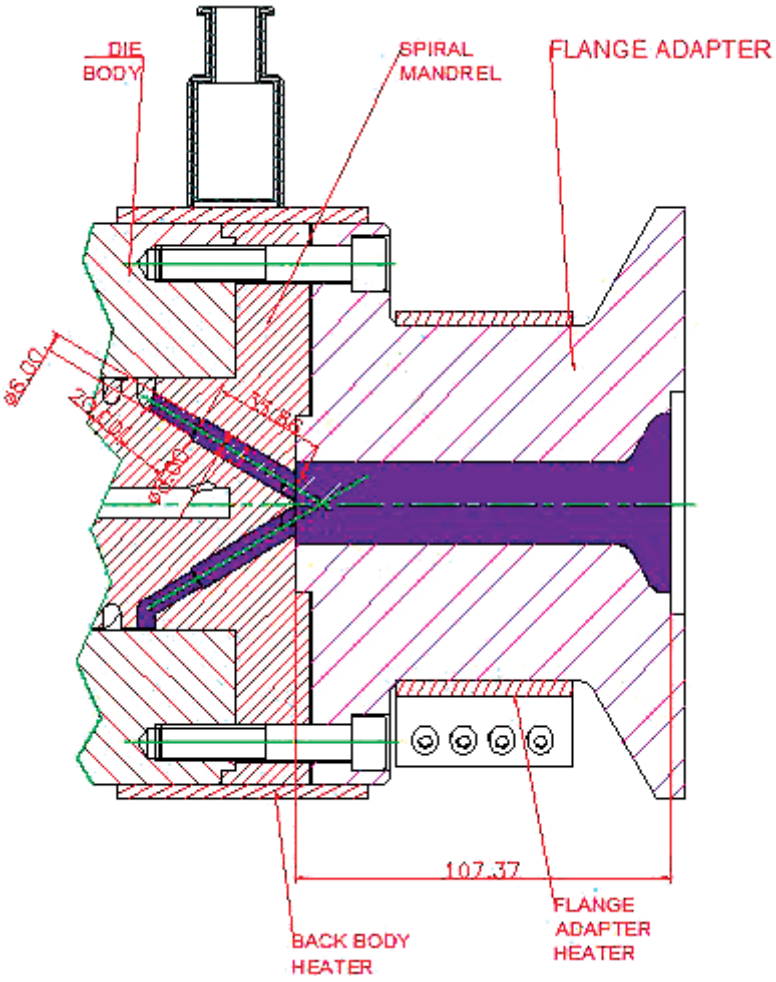

Figure 5.13 Feed section of spiral die

5.4.5 Section above the Spirals

The section above the spirals consists of the relaxation section and the tooling section (i.e., the die bush and the pin or mandrel). The geometry of the die bush and the pin changes with the change of pipe size; therefore, the dimensions of this section will be changing accordingly, but the relaxation part remains the same for all sizes of the pipes made from a given die. In other words, the dimensions of section 2 and 3, being a part of the design of the main die, always remain the same. The dimensions required for a ⌀50 mm pipe, for insertion into the software, are as detailed in Figure 5.14.

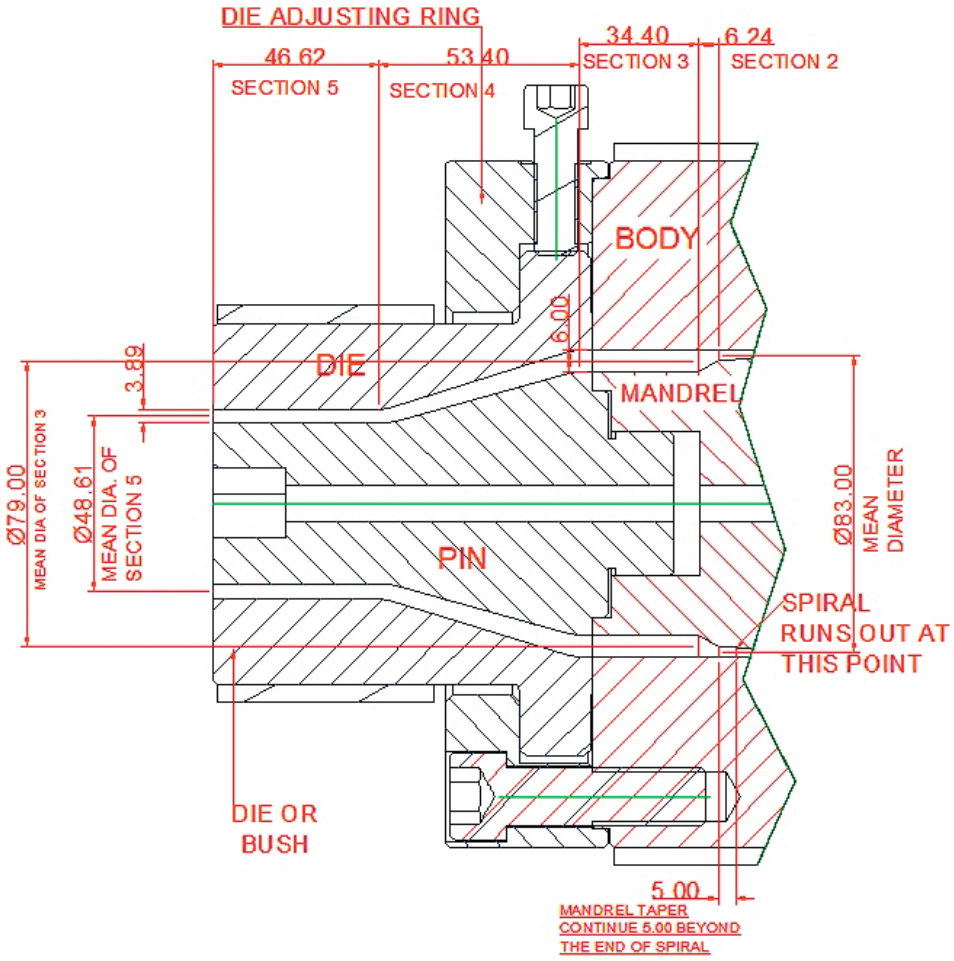

Figure 5.14 Section above the spirals

As can be seen from Figure 5.14, in the first section, the taper created on the mandrel by the difference in the reference diameter of the spiral mandrel and the diameter at the end of the spirals is continued for 5 mm beyond the end of the spirals, for the convenience of machining this taper. The diameter at the end of the first section is the mean diameter at this point between the body and the mandrel.

The second section is the blending of the first section and the third section. The diameter at the beginning of the second section is the same as in the previous section and the end diameter is the same as the next section, and different gap dimensions for the beginning and the end are given.

The third section is the relaxation section, which extends to a straight section inside the die bush. The diameter for this section is the mean diameter between the body and the mandrel. The thickness of this section at the beginning and the end is the same.

The next section is section 4, the convergence section between the top die diameter and the die land. The diameter at the beginning is the same as in the previous section and the end is the same as the die land. Both diameters are mean diameters between the outer surface and the inner surface. The gaps at the beginning and the end of this section are different.

The final section is the land section, where the diameters at the beginning and the end are the same and so are the gaps. For making this point clear, Table 5.4 gives all the dimensions necessary for all the die parts above the spirals.

Table 5.4 Geometry of Section above the Spirals

Section #	Diameter [mm]	Total height [mm]	Section height [mm]	Gap beginning [mm]	Gap end [mm]
1	83.00	5.00	5.00	2.00	2.00
2	79.00	11.24	6.24	2.00	6.00
3	79.00	46.00	34.76	6.00	6.00
4	52.50	99.40	53.40	6.00	3.89
5	52.50	146.02	46.62	3.89	3.89

5.4.6 Material Information

After defining the die geometry of the melt flow path, it is necessary to give the material information and the processing conditions to simulate the flow of the melt through the die. The material used here is the same as stated in Chapter 4, low density polyethylene; thus, Table 5.5, showing temperature, shear rate, and viscosity properties, is a repeat of Table 4.1 in Chapter 4. These properties are inserted into the software along with the thermodynamic properties.

Table 5.5 Viscosity-Shear Rate of LDPE at Three Temperatures

Temperature [°C]	Shear rate $\dot{\gamma}$ [s^{-1}]	Viscosity η [Pa·s]
190	61	1200
	214	571
	728	256
	2530	110
	8820	46
	30000	19

Temperature [°C]	Shear rate $\dot{\gamma}$ [s^{-1}]	Viscosity η [Pa·s]
220	61	859
	214	431
	728	205
	2530	90
	8820	39
	30000	17
250	61	681
	214	327
	728	156
	2530	72
	8820	33
	30000	17

The thermodynamic properties of the material for solid state and melt state are given in Table 5.6.

Table 5.6 Thermodynamic Properties

Melt properties		Solid properties	
Density ρ	762.00 kg/m^3	Density ρ	762.00 kg/m^3
Specific heat capacity C_p	2300 J/kg/°C	Specific heat capacity C_p	2300 J/kg/°C
Thermal conductivity k	0.2400 W/m/°C	Thermal conductivity k	0.2800 W/m/°C
		Melt temperature T_m	110 °C
		Freezing temperature T_f	90 °C
		Specific heat of fusion H_f	130000 J/kg

5.4.7 Processing Conditions

The information is not complete without the processing conditions. The processing conditions relate to the output required for an optimum production rate to match the equipment, the material temperature, and the die temperature. The software gives the user the facility to define the accuracy of the calculations required, but, for practical purposes, the dies are designed with a lot of latitude for flexibility of material choice and a range of product sizes. Therefore, this information is not very important and the default values are used. To complete the data input into the software, the following processing conditions are given to start with and they can be adjusted after seeing the simulation results:

- Output or mass flow rate: 100 kg/h
- Material temperature: 220 °C
- Die temperature: 230 °C

5.4.8 Checking Parameters

The purpose of giving all the information above has not been to demonstrate the software, but to use the software as a tool for getting the die design right for the manufacturing of pipes and tubes, in this case. Before looking at the results, it would be necessary to know the critical values, to compare the results and make the necessary changes to the design. The software has some critical values set in the background, as shown in Table 5.7. Any deviation from these set parameters is highlighted so that the necessary changes to the die geometry are made, in order to bring the results within set limits.

Table 5.7 Critical Values of Flow Variations

Maximum pressure	20 MPa
Minimum shear rate	8.0000 s^{-1}
Minimum wall shear stress	30.000 kPa
Maximum wall shear stress	140.00 kPa
Interface shear stress	60.000 kPa
Elongation rate	50.000 s^{-1}

5.4.9 Simulation Results

After putting the information into the software, the results are given in the following sections.

5.4.9.1 Feed Section

The results shown in Table 5.8 are obtained from a simulation in the feed section shown in Figure 5.13.

Column 1 in Table 5.8 is the part number of the feed section. Column 2 is the number of branches in the part and the diameter of that part; column 3 is the length of the part. Column 4 is the pressure drop in that part of the feed section; column 5 is the pressure drop from the entry of the part of the feed section to the die exit. Column 6 shows the temperature at the exit of the part of the feed section. Column 7 is the shear rate at the wall of the part of the feed section; column 8 is the

shear stress at the wall. Column 9 is the average velocity in that part of the feed section. Columns 2 and 3 are the geometry input into the software from Section 5.4.4, "Feed Section" and columns 4 to 9 are the results from the simulation.

Table 5.8 Results of Variables in Feed Section

1	2	3	4	5	6	7	8	9
Part #	N° × ∅ [mm]	Length [mm]	Δp [MPa]	ΔP [MPa]	T [°C]	Shear rate [s^{-1}]	Shear stress [kPa]	Velocity [mm/s]
1	1 × 30	107	0.50943	17.9819	220.295	20.445	36.006	52.3967
2	6 × 8	36	1.37004	17.4724	221.083	179.87	76.0323	122.805
3	6 × 6	20	1.35885	16.1024	221.856	426.36	101.805	218.320

These results are very useful for deciding the suitability of the geometry of each section. If it is seen that the results are outside the desired parameters, a corrective action can be taken at this stage. For instance, if it were seen that the total pressure drop in the system in column 5 is over 20 MPa, the die geometry would be changed to reduce the pressure drop in the system. Similarly, if the shear rate in part #1, column 7, were below 8 s^{-1}, that section would be made smaller in diameter to increase the shear rate. The geometry of the feed section is relatively simple to alter to make it satisfy the checking parameters.

5.4.9.2 Spiral Section

The next section after the feed section is the spiral section. The spiral section is the heart of the die design, being the distributor of the melt around the circumference and streamlining the flow. Therefore, maximum attention is given to get the results right in this section. From the above information of the geometry and the material inserted in the software, the results obtained are critically analyzed as follows:

5.4.9.2.1 Pressure Drop

The pressure drop at the end of the feed section above was 14.74355 MPa, which is the pressure drop from the beginning of the spiral section. The pressure drop at the end of the spiral section calculated by the software is 4.2425 MPa. Figure 5.15 shows how the pressure is dropping from the beginning to the end of the spiral section and Figure 5.16 shows the graph of the pressure drop in this section.

As a general rule of thumb, the pressure drop in the spiral section should be about 50% of the total pressure drop in the die, which leaves the remaining 50% of the pressure drop for the feed and tooling sections. Looking at these results, the pressure drop seems to satisfy this criterion. As can be seen from the results in the feed section, the pressure drop is 3.2383 MPa, which leaves 4.2425 MPa for the

tooling section for a 50 mm die. The pressure drop for other sizes would vary in the tooling section.

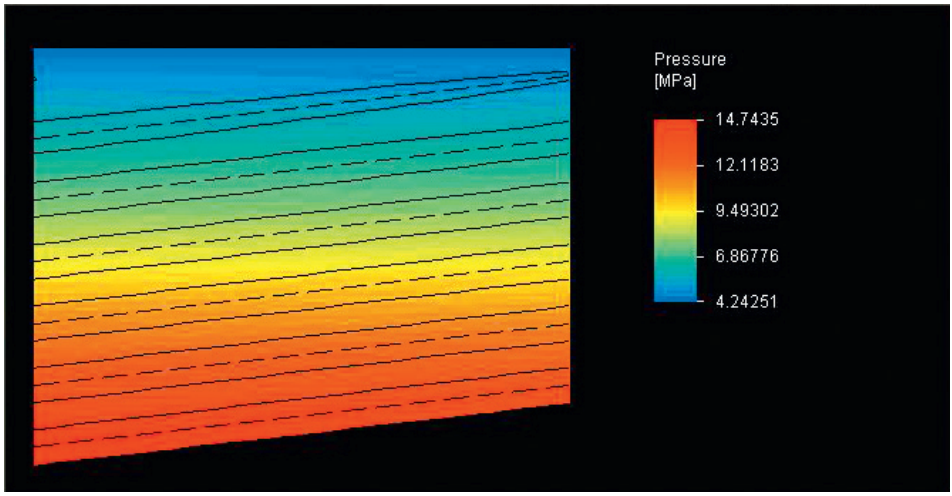

Figure 5.15 Pressure drop in the spiral section

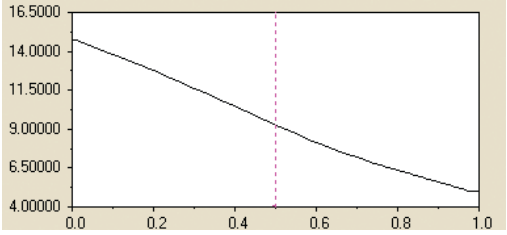

Figure 5.16 Graph of pressure drop in the spiral section

5.4.9.2.2 Shear Rate

Unlike the pressure drop in the spiral section, the shear rate is different in the mandrel to the shear rate on body, because more and more melt is leaking out of the spirals into the section between the mandrel and the body. As a result, the shear rate in the spirals is decreasing and above the spirals it is increasing, as can be seen from Figure 5.17 and Figure 5.18.

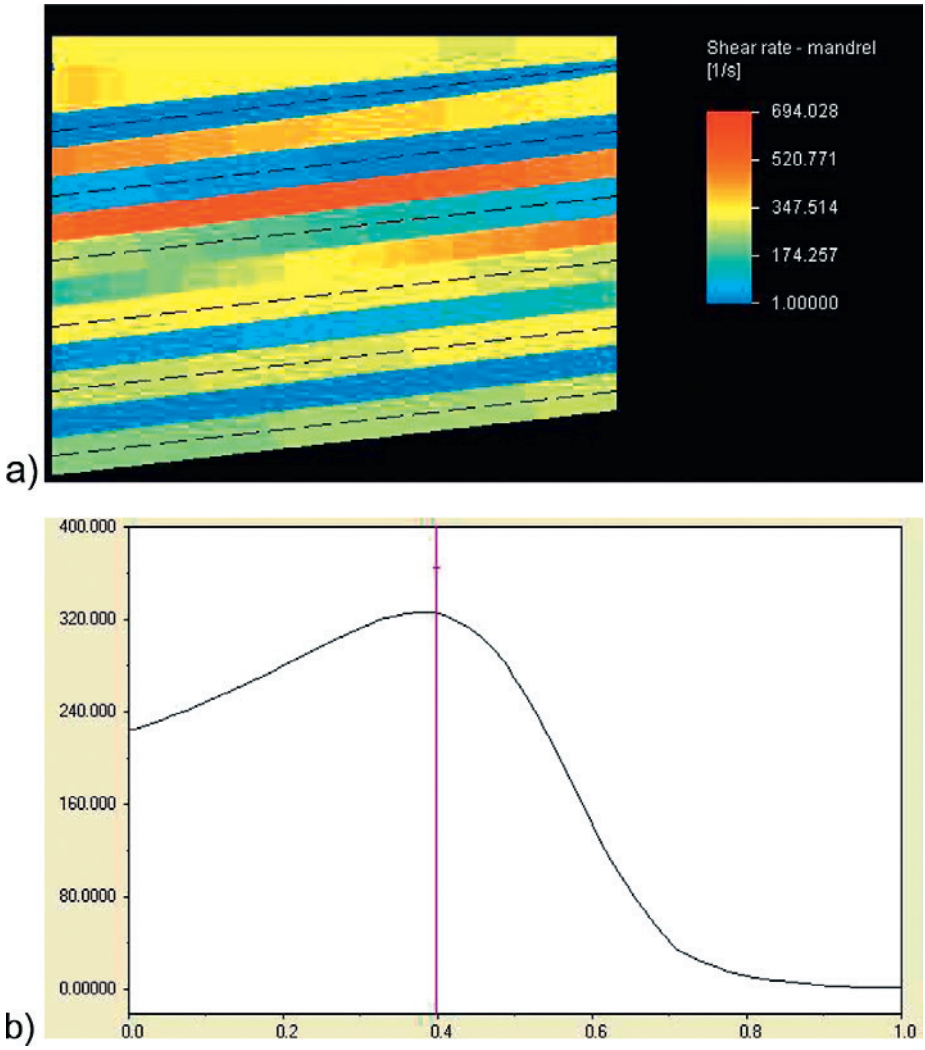

Figure 5.17 a) Shear rate in the mandrel, b) Shear rate in mandrel; peak shear rate = 325 s^{-1}

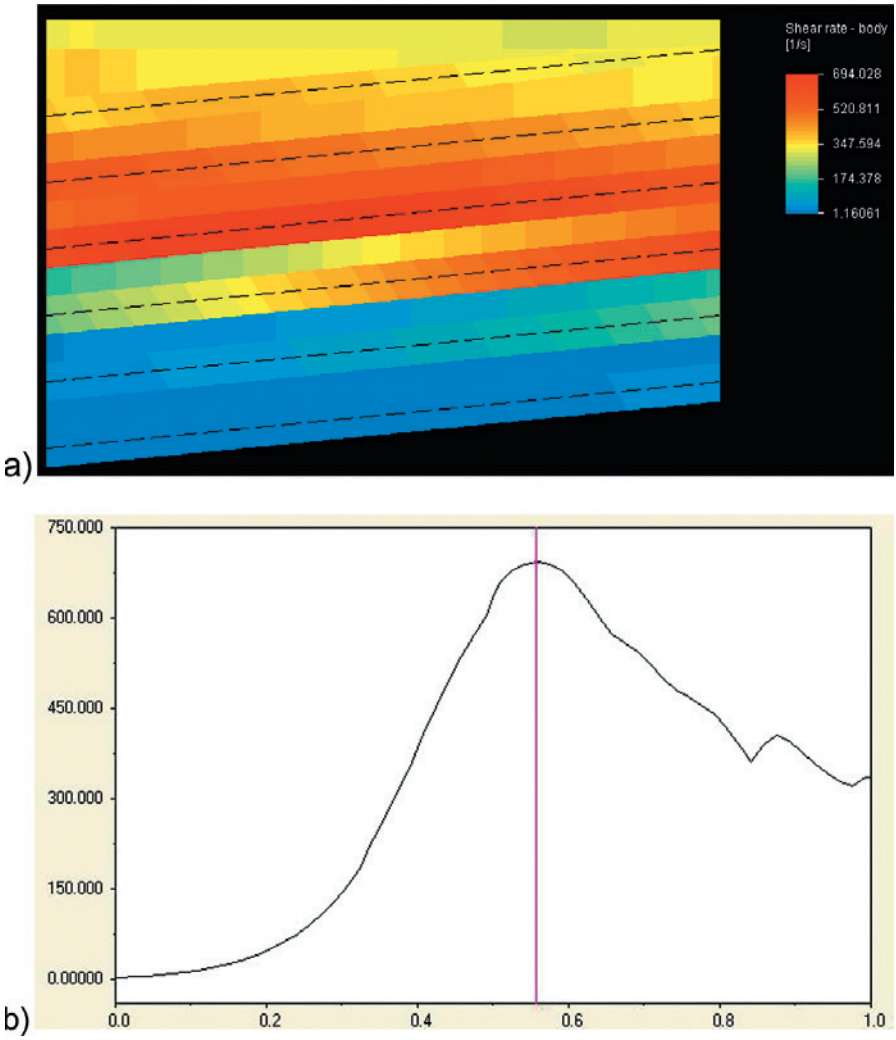

Figure 5.18 a) Shear rate on body wall, b) Shear rate on body wall at peak = 692 s^{-1}

Normally a shear rate below 8 s^{-1} means that the melt is not moving much, therefore the residence time is very high and can cause heat sensitive materials to degrade. Here, the shear rate is below 8 s^{-1} in a very small part and it quickly increases, and the material being processed is not heat sensitive. Moreover, the average shear rate is well above the minimum requirement; therefore, this rule is ignored and the shear rate on the body wall is considered satisfactory.

5.4.9.2.3 Shear Stress

Like the shear rate, the shear stress also differs in the mandrel to the shear stress in the body, as shown in Figure 5.19 and Figure 5.20.

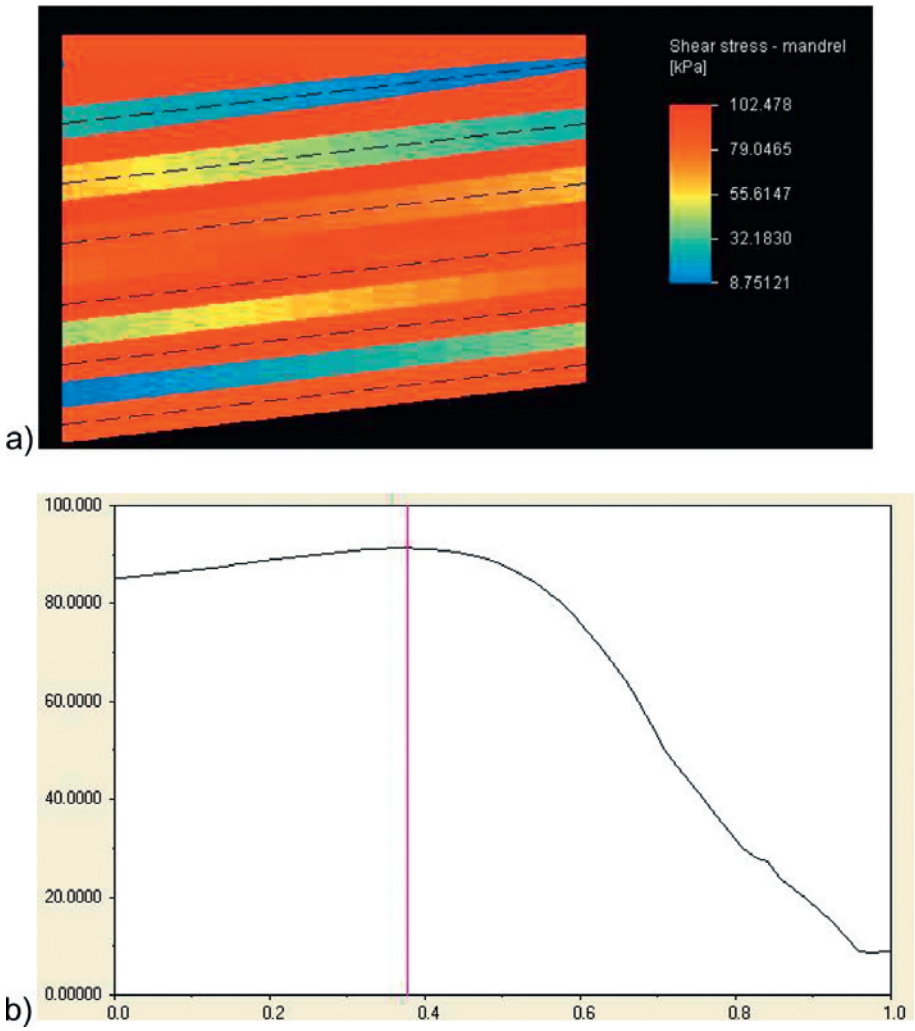

Figure 5.19 a) Shear stress in the mandrel, b) Shear stress in the mandrel; maximum at 25 mm of mandrel height = 91.28 kPa

In the case shown in Figure 5.19, the shear stress in the mandrel starts from about 85 kPa and peaks at about 25 mm of the mandrel height. Thereafter, it gradually drops down to about 8.75 kPa at the spiral run out.

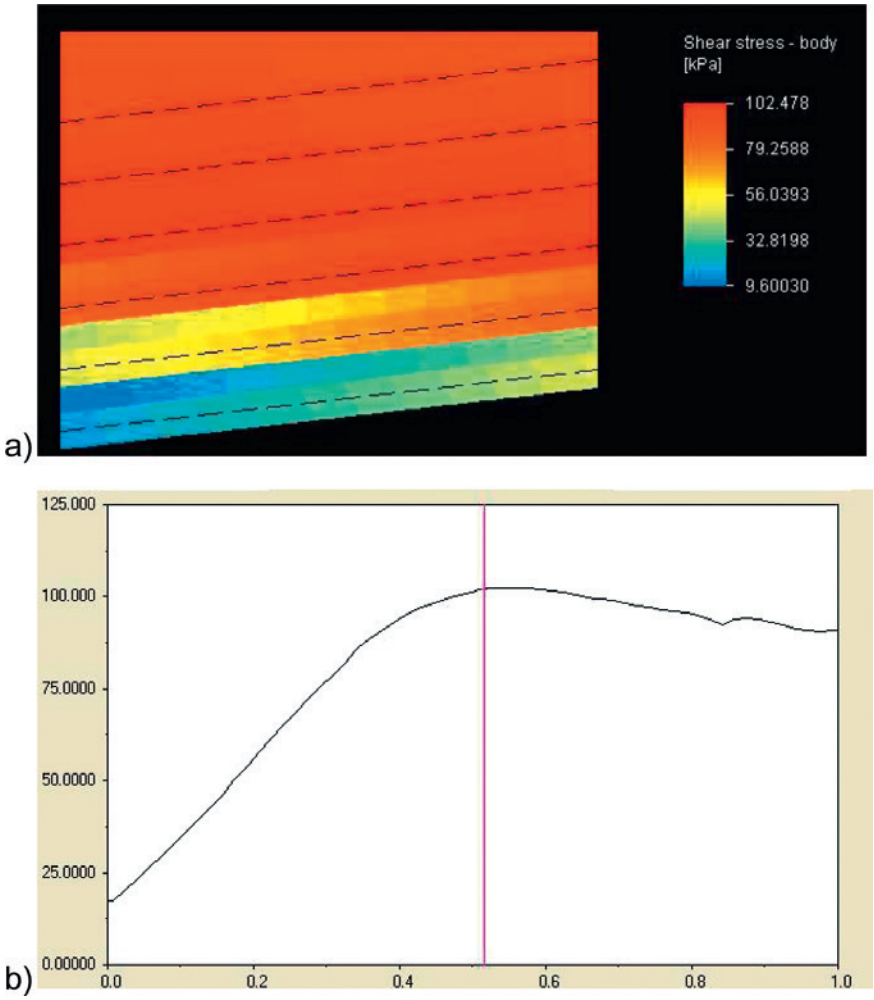

Figure 5.20 a) Shear stress in body, b) Shear stress in body starts from 9.60 kPa, peaks at 102 kPa at about 34 mm of mandrel height, and drops to 91 kPa at the end of spirals

As seen in Figure 5.20, taken from the simulation software, the shear stress in the body starts very low, at 9.60 kPa, reaches a maximum of 102 kPa at about 34 mm from the start of the spirals or reference diameter, and then comes down to 91 kPa at the end of the spirals. In either case, the shear stress is well below the maximum limit of 140 kPa, at which point the melt fracture starts. Therefore, the spiral section of the die design is satisfactory from the shear stress point of view.

5.4.9.2.4 Temperature Variation

The variation of the temperature due to the effect of the shear stress in the mandrel also needs checking, to ensure that there is not a great variation in temperature in the spiral section. The temperature profile in Figure 5.21 shows a variation of the temperature from 220 °C to 224.50 °C. For materials like low density polyethylene, this much variation is normal.

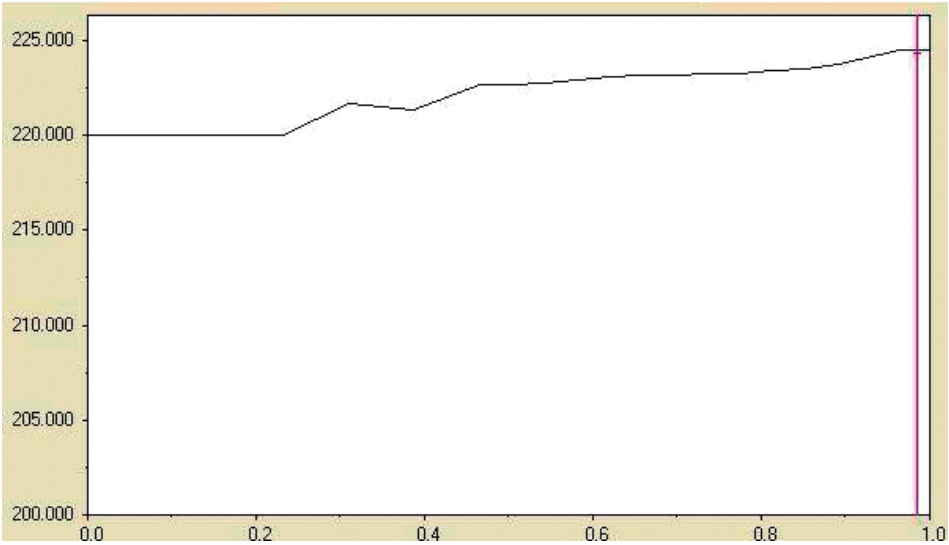

Figure 5.21 Temperature variation in the spiral section in the main direction, from 220 °C to 224.5 °C

5.4.9.2.5 Flow Balance

A good die design should have a balanced flow of melt in the spiral direction and in the main direction, so that the material leakage out of the spiral is as widely spread as possible, perhaps ¾ of leakage being in the middle. Also, an early leakage out of the spiral causes a melt flow imbalance and there is the possibility for the melt to redistribute around the circumference. On the other hand, a late leakage causes high pressure in the mandrel, leaving the melt stagnant at the bottom of the spirals. Therefore, a maximum leakage around halfway in the mandrel is desirable, as shown in Figure 5.22.

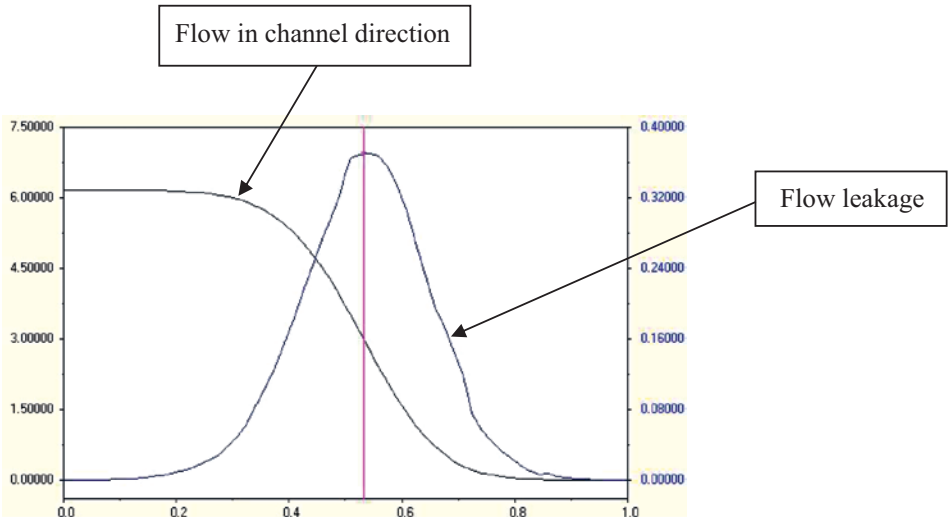

Figure 5.22 Flow in channel direction and flow leakage

In Figure 5.22, although the flow leakage is equal around the middle of the mandrel, still the majority of the leakage is close to the middle. Therefore, a further fine tuning of the flow leakage is required for improving this die design.

5.4.9.2.6 Flow Variation

The last sign of a good mandrel design is that the flow variation at the end of the spirals is not more than ±4%. In Figure 5.23, the average value of melt flow is 0.6173 cm^3/s and the variation is ±3.99%, which is within the limits given by the software. Therefore, the design of the spiral mandrel is satisfactory for the given material and other processing parameters.

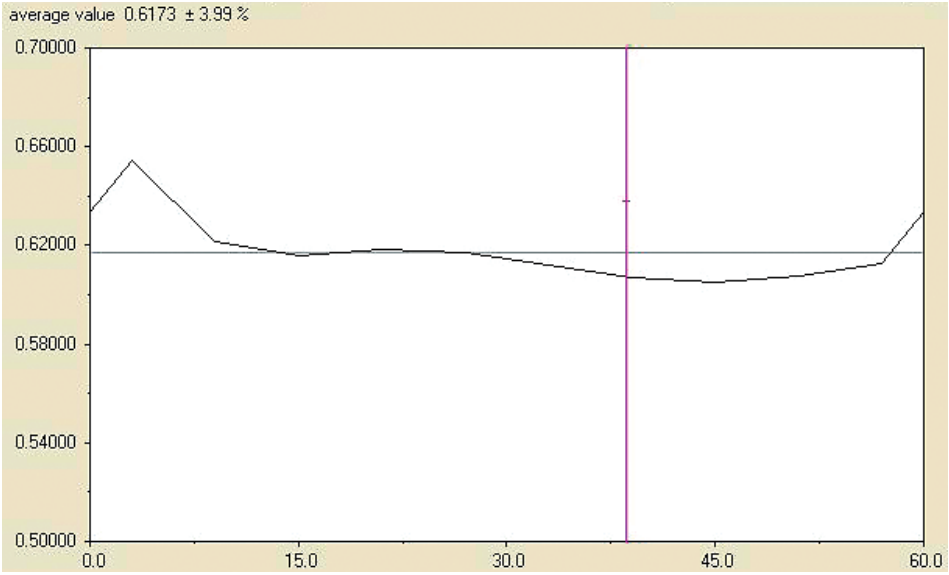

Figure 5.23 Flow variation at the end of spiral = 0.6173 $cm^3/s \pm 3.99\,\%$

5.4.9.2.7 Fine Tuning

Slight modifications to the design of the spiral section give much improved results. Since the spiral section and the feed section are permanent parts of the die, whereas a tooling section changes according to the product size, it is worth giving a little extra attention to optimize the design of these sections. Increasing the length of the spiral section to 72 mm instead of 66 mm—by increasing the land between spirals by 1 mm and increasing the gap at the end of the spirals from 2.00 mm to 2.50 mm—gives much improved results, as shown in the flow balancing and the flow variation at the end of the spirals plotted in Figure 5.24 and Figure 5.25.

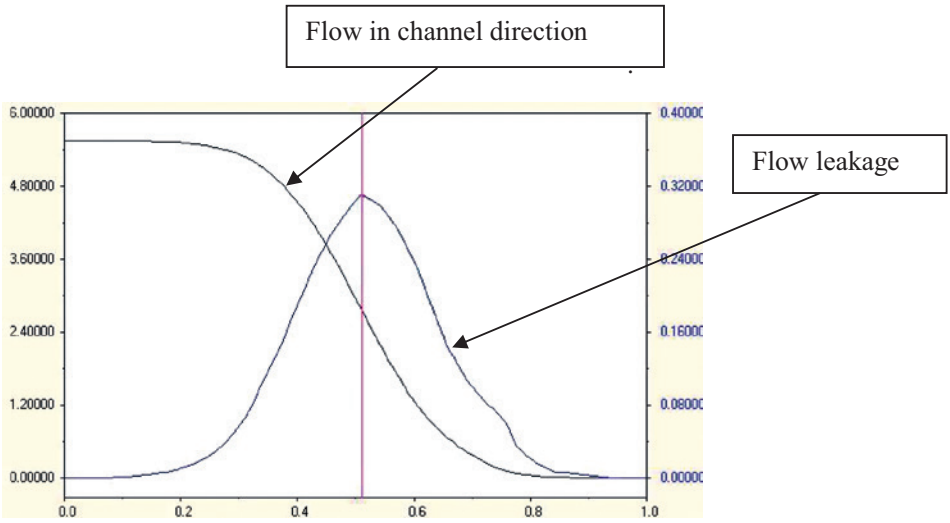

Figure 5.24 Improved flow balance in the channel and flow leakage

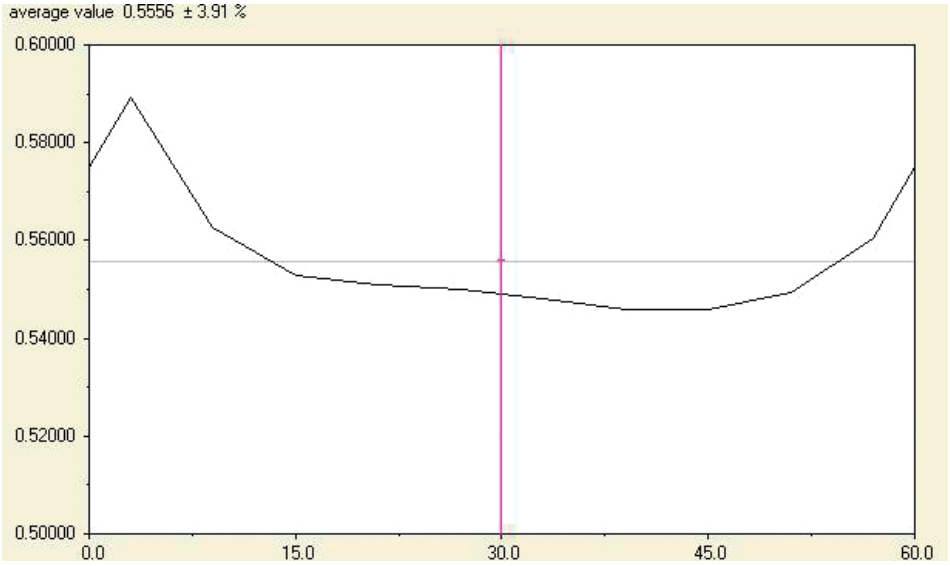

Figure 5.25 Improved flow variation at the end of the spiral 0.5556 $cm^3/s \pm 3.91\,\%$

These alterations to the design of the spiral section result in a slightly lower pressure drop in the system of 16.60 MPa, instead of 17.98 MPa, and the pressure drop in the spiral section changes to 9.10 MPa, instead of 10.50 MPa, when compared with the previous results. These differences of pressure drop are not of great significance, as the pressure drop in the die can be increased either by lowering the die temperature slightly or increasing the land length in the tooling section.

5.4.9.3 Simulation of Tooling Section

The tooling section is the section above the spirals and consists of the relaxation section and the annular section between the pin and the die, as shown in Figure 5.14. The dimensions of this section for a ⌀50 mm pipe are shown in Table 5.9.

Table 5.9 Result Variables in Tooling Section

#	Mean diameter D [mm]	Total height from start H [mm]	Section height dH [mm]	Gap at the beginning [mm]	Gap at the end [mm]
1	83.00	5.00	5.00	2.50	2.50
2	79.00	11.24	6.24	2.50	6.00
3	79.00	46.00	34.76	6.00	6.00
4	52.50	99.40	53.40	6.00	3.89
5	52.50	146.00	46.62	3.89	3.89

From the insertion of the above information into the software, the software gives the following results:

5.4.9.3.1 Pressure Drop

The pressure drop in this section is the residual pressure of the system, after the pressure "consumed" by the feed section and the spiral section. So, the remainder of the pressure at the start of the section above the spirals is 4.33 MPa, which drops to 0 at the die exit as shown in Figure 5.26.

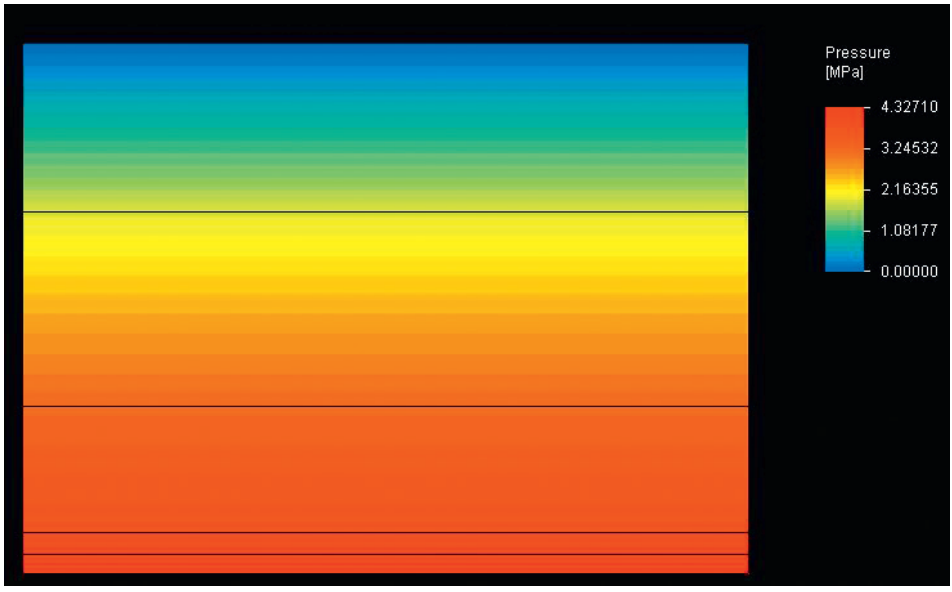

Figure 5.26 Pressure drop in the tooling section

5.4.9.3.2 Shear Rate

The shear rate in the tooling section is the same in the body and the mandrel, because the dimensional input is the mean diameter. Therefore, the shear rate in this section is around the mean diameter and varies from 85.95 s^{-1} at the start of the section to 108 s^{-1} at the end, as shown in Figure 5.27.

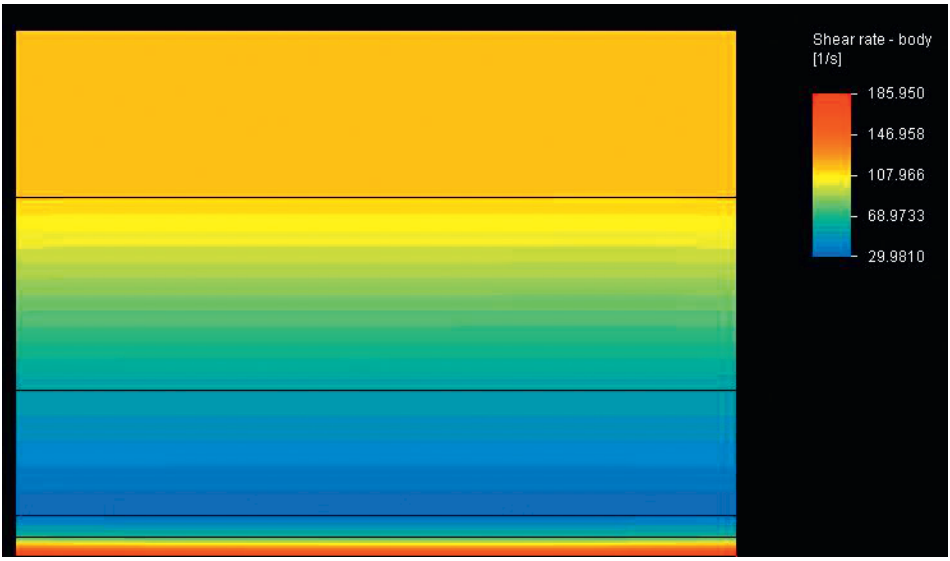

Figure 5.27 Shear rate in the tooling section

Since the shear rate throughout this section is above the minimum of 8 s^{-1}, it is satisfactory from the design point of view.

5.4.9.3.3 Shear Stress

Like the shear rate, the shear stress is also the same in the die and the mandrel, as it is taken around the mean diameter. As shown in Figure 5.28 and Figure 5.29, the shear stress in the land area of the tooling section is 77.50 kPa, which is well below the critical value of 140 kPa where shark skin or melt fracture is likely to occur. If the shear stress in the area approaches the critical point, then some remedial action is necessary, such as increasing the temperature in the end of the die, widening the die gap in the land area, or shortening the land length.

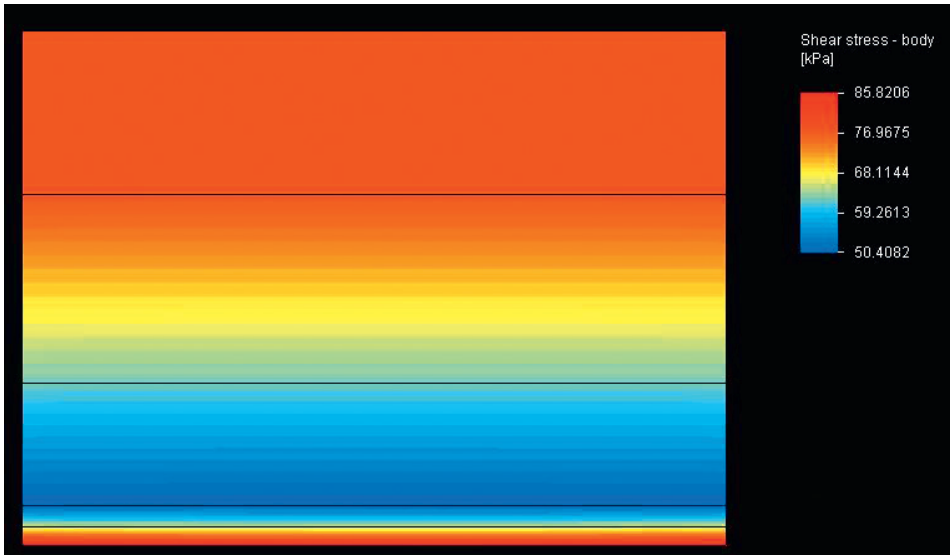

Figure 5.28 Shear stress in the tooling section

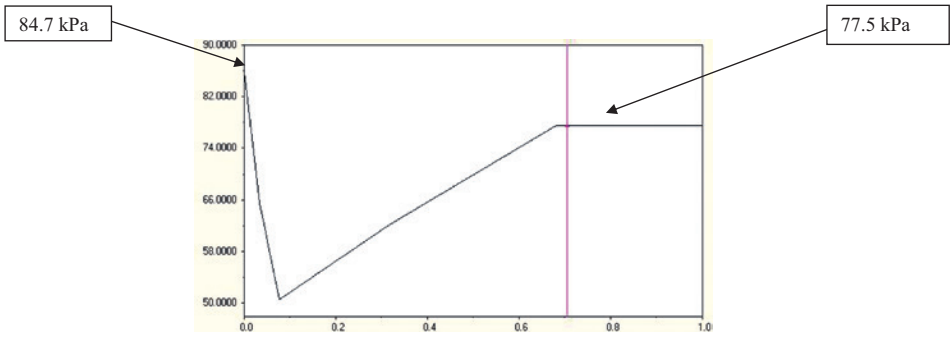

Figure 5.29 Graph of shear stress in tooling

5.4.9.3.4 Temperature Variation

The temperature in the tooling section varies from 214 °C to 211 °C, which is below the set temperature. The set temperature for simulation purposes is 220 °C in the melt and 200 °C in the die body. In any case, the temperature in this section is independently controlled and can be adjusted to suit the extrusion process and product quality.

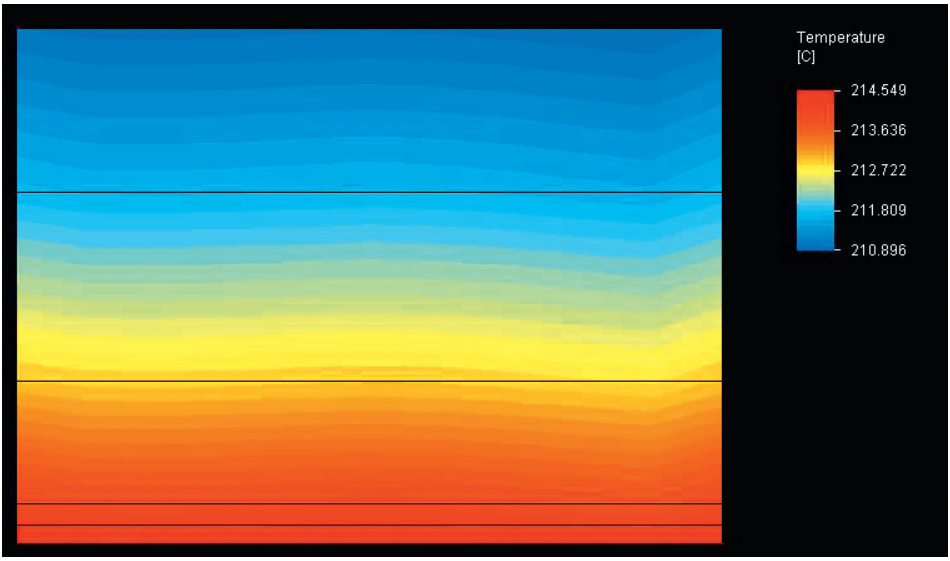

Figure 5.30 Temperature in tooling section

The above parameters complete the die simulation for finalizing the design of a ∅50 mm pipe die. As the die is made for a range of products varying from ∅20 mm to ∅50 mm, it is necessary to see the variation in the process parameters for the smallest size tooling in the range. The following section describes the changes made to the design of the die for ∅20 mm tubes and the simulation results obtained from these changes.

5.4.10 Changes to Die for ∅20 mm Tubes

As stated above, the feed section and the spiral sections are finalized for the largest size of the product in the range and the tooling section is changed for all other sizes. Therefore, the die geometry as described above in Sections 5.1, 5.2, 5.3, and 5.4 remains unchanged, with the exception of the changes made to the spiral height in Section 5.4.9.2.7 as a result of the fine tuning of the die from the simulation results. The tooling section geometry for ∅20 mm tubes as described in Chapter 3, Table 3.3 (Draw Down Ratio Calculations) and Figure 3.4 (Pin and die for 20 mm tubes), is substituted in the die design given in Figure 5.1. The resultant die design is shown in Figure 5.31.

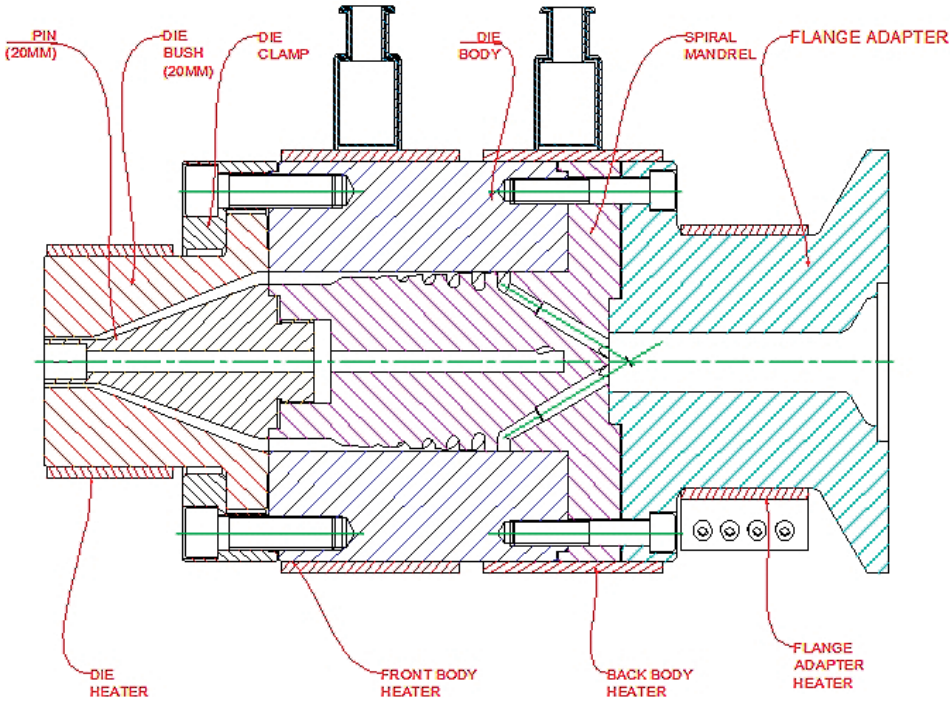

Figure 5.31 Revised design of die with 20 mm tooling

The dimensions in Table 5.10 for the ⌀20 mm tube tooling are inserted in the simulation software to replace the dimensions of ⌀50 mm tooling in order to compare the results of this change. The other processing conditions like material output, melt temperature, and die temperature are left unchanged.

Table 5.10 Table of Tooling Dimensions for 20 mm Tube

#	Mean diameter D [mm]	Total height from start H [mm]	Section height dH [mm]	Gap at the beginning [mm]	Gap at the end [mm]
1	82.50	5.00	5.00	2.50	2.50
2	79.00	10.52	5.52	2.50	6.00
3	79.00	45.00	34.48	6.00	6.00
4	52.50	122.45	77.45	6.00	1.58
5	52.50	146.00	23.55	1.58	1.58

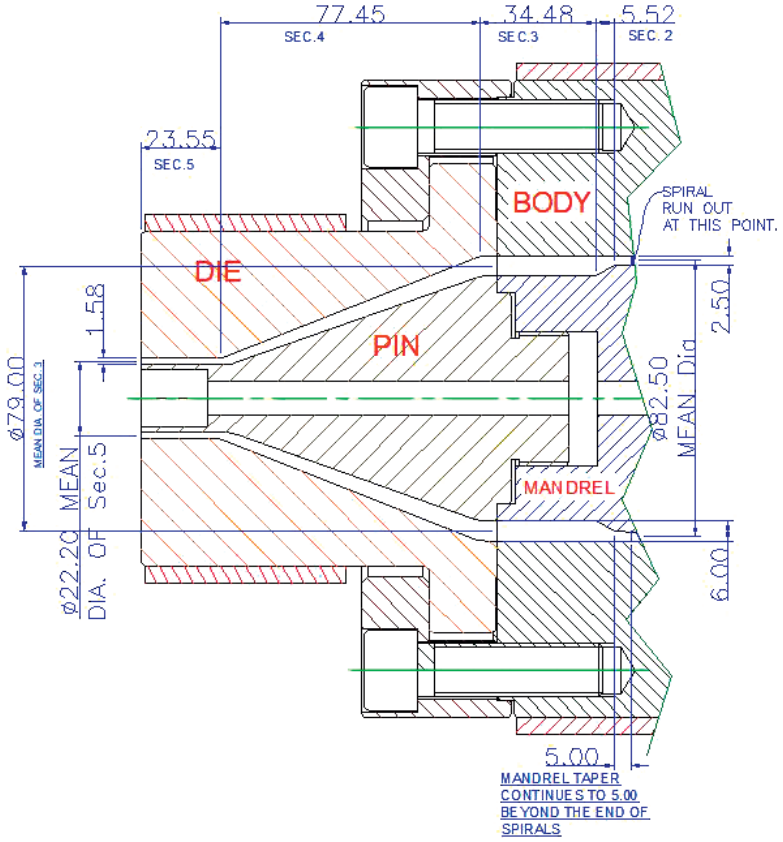

Figure 5.32 Section above the spirals of 20 mm tube

The noticeable changes in flow characteristics of the die with ø20 mm tooling are as follows:

1. The total pressure drop in the die from the extruder end to the die exit is 19.69 MPa instead of 16.55 MPa as for the 50 mm tooling. Most of this difference is the result of the small diameter and the narrow gap at the end of the tooling in the land area. The pressure drop from the end of the spiral section to the die exit is 7.45 MPa instead of 4.24 MPa as in the previous case.
2. Shear rate: It is noticed from the simulation results that the shear rate in the land area of the tooling is 758 s^{-1} compared with the section above it, where the shear rate is 185 s^{-1}. This drastic change in the shear rate is due to the fact that the melt is being pushed through a small die gap.
3. Shear stress (which affects the product quality): It is relatively moderate at 112.48 kPa; the limit at which the shark skin occurs is 140 kPa.
4. Temperature: In the land area it is almost the same as in the previous case, at 214.50 °C.

Conclusions

The die design is satisfactory for the whole range of products from ⌀20 mm to ⌀50 mm for the given grade of LDPE at output level of 90 kg/h. The output used in this instance is very moderate and the pressure drops are quite reasonable; therefore, there is further scope for more output from the die head, provided that the rest of the equipment allows it.

As the die head is designed for a wide range of products and many different materials and material grades, before finalizing the drawings a few other materials are also tried, using the simulation software to assess the die capability. Unlike the above illustrations, the results from the simulation are published here as a summary of the main parameters. If some problem is seen, remedial solutions are suggested.

5.4.11 Different Materials

5.4.11.1 HDPE

HDPE has a very large number of grades and a very broad molecular spectrum; therefore, the grade of material should be selected carefully to suit the application. In most of the cases, a die that is designed for LDPE works for HDPE, but in some cases, when the material is very stiff and has a high molecular weight, some adjustments to the tooling and processing conditions are necessary. As mentioned above, the feed section and the spiral section are designed for a range of products and materials, hence they are a permanent part of the die, and the tooling section is changed for each product. The tooling section is relatively less expensive to manufacture; therefore, a similar approach for different materials should be adopted.

First of all, a particular grade of HDPE, perhaps the most commonly used for the manufacture of water and gas pipes, is tried here: a grade of HDPE from Solvay, called P100, is tried (with 90 kg/h output, 230 °C melt temperature, and 204 °C die temperature) to see the results from the simulation and establish the changes necessary to the design or processing conditions. The simulation results, using the same die geometry for a ⌀50 mm pipe as above, are as shown in Table 5.11.

Table 5.11 Summary of Simulation Results

		Feed section	Spiral section	Tooling section (section above the spirals)	Total
1.	Pressure drop [MPa]	5.39	14.97	7.74	28.10
2.	Shear rate max. [s^{-1}]	483	693	190 to 133	
3.	Shear stress max. [kPa]	150.50	138.50	130.00	
4.	Temperature [°C]	242	241	240	

Most of the results seem to be satisfactory except for the pressure drop, higher than the desired level of 20 MPa, most of which is in the tooling section. Although the dies are designed to withstand a 60 MPa pressure drop as a safety precaution, to stay within the set limit the first approach is to modify or use an alternative set of tooling with a higher draw down ratio, which means a larger gap in the land area at the end of the die bush.

In Chapter 3, the calculations for tooling sizes with a certain draw down ratio were explained. Knowing that LDPE is easy to process compared with HDPE, the tooling for HDPE using a higher draw down ratio—as shown in Table 5.12—is tried.

Table 5.12 Product Sizes and Tooling Sizes with Higher Draw Down Ratio

Product size [mm]	Product OD [mm]	Product ID [mm]	Wall thickness [mm]	Die ID [mm]	Pin OD [mm]	DDR
Pipe ⌀50	50.00	42.60	3.70	60.00	51.12	1.44
Pipe ⌀40	40.00	34.00	3.00	48.00	40.80	1.44
Pipe ⌀32	32.00	27.20	2.40	38.40	32.64	1.44
Pipe ⌀25	25.00	21.20	1.90	30.00	25.44	1.44
Pipe ⌀20	20.00	17.00	1.50	24.00	20.40	1.44

Tooling made according to the dimensions shown in Table 5.12 for pipe size ⌀50 mm—namely, die ID = 60.00 mm and pin OD = 51.12 mm—is tried. The results are shown in Table 5.13.

Table 5.13 Simulation Results for ⌀50 mm Die

		Feed section	Spiral section	Tooling section (section above the spirals)	Total
1.	Pressure drop [MPa]	5.39	14.97	7.74	27.83
2.	Shear rate max. [s^{-1}]	483	693	190 to 133	
3.	Shear stress max. [kPa]	79–150.50	137	133–124	124 in the land area
4.	Temperature [°C]	240–242	230–241	240–234	234 in the land area of the die

From the results in Table 5.13 it is apparent that by changing the draw down ratio there is some improvement in the pressure drop, but it is not significant enough to meet the criterion of a maximum pressure drop of 20 MPa in the die. Sometimes, selecting a different grade of material for a similar application gives better results. For instance, Eletex TUB 131—commonly known as PE80 and used for the manufacture of pressure pipes for gas and water applications—gives more satisfactory results, as shown in Table 5.14. These results are more satisfactory as the maxi-

mum pressure drop is close to the maximum of 20 MPa and all other parameters are satisfactory.

Table 5.14 Simulation Results for Ø50 mm Die Using Different Grades of HDPE

		Feed section	Spiral section	Tooling section (section above the spirals)	Comments
1.	Pressure drop [MPa]	4.3	11.84	4.42	20.56 (total)
2.	Shear rate max. [s^{-1}]	316	265	61	
3.	Shear stress max. [kPa]	142	136	80	80 in the land area
4.	Temperature [°C]	240–242	240–244	240–244	244 in the land area of the die

From the above results, it is clear that dies designed for one material can work with several other materials with slight adjustments to the die geometry and the processing conditions and the change of material grades for the same product applications. It is also true that dies designed for a specific application work better for that purpose. If it is clear from the start of the design that the die is to be used for multiple materials, then it should be made for the most difficult material to start with and afterwards adjustments for easily flowing materials should be made. It would be wrong to assume that a die can work with any material.

The above die is designed for LDPE and it will work well with several grades of HDPE, polypropylene, and polyamides. Sometimes, it is necessary to make a die with interchangeable parts for different materials and products. For different sizes of products, different tooling is often used, but for different materials sometimes different spiral mandrels are also used. To widen the scope of the die under discussion, some more materials are tried in order to find the best combination of parts.

5.4.11.2 Polypropylene

Polypropylene pipes are used for non-pressure applications mainly, therefore they are included for checking the above die for its suitability to manufacture pipes. One grade of polypropylene, BA202E, made by Borealis GmbH—for which the rheology data is available from Campus® 5.0—is used here. Using a lower draw down ratio for the tooling and an output of 90 kg/h, it gives the results shown in Table 5.15.

Table 5.15 Simulation Results for Ø50 mm Die Using Polypropylene

		Feed section	Spiral section	Tooling section (section above the spirals)	Comments
1.	Pressure drop [MPa]	3.61	9.29	4.55	17.45 (total)
2.	Shear rate max. [s^{-1}]	18–543	3–555	33–218	
3.	Shear stress max. [kPa]	47–102	20–91	58–84	84 in the land area
4.	Temperature [°C]	220–222	210–220	220	220 in the tooling section

It is apparent from the results in Table 5.15 that processing polypropylene through this die is very easy and gives good results. Therefore, the same die can be used for processing the particular grade of polypropylene. Since the values of critical parameters such as the pressure drop and the shear stress are fairly low for the given size of the tooling, there is a good scope to increase the output from the given size of tooling and also have satisfactory results from smaller sizes of the products.

5.4.11.3 PA12

Nylon 12, a general grade used for many applications including cable covering and tubes, like Grilamid L25W50X, is tried to process through the die. The processing conditions are 85 kg/h of output, die and melt temperature of 220 °C, and a tooling section geometry with a 1.21 draw down ratio from Table 5.12, and the results are shown in Table 5.16.

Table 5.16 Simulation Results for Ø50 mm Die Using Polyamide

		Feed section	Spiral section	Tooling section (section above the spirals)	Comments
1.	Pressure drop [MPa]	4.37	11.26	4.35	19.98 (total)
2.	Shear rate max. [s^{-1}]	235	179	65	
3.	Shear stress max. [kPa]	155	138	85	85 in the land area
4.	Temperature [°C]	220–221	220–222	223	223 in the tooling section

It is apparent from the results that the value of all the important parameters are within the limits set in the software. The high shear stress noted in Table 5.16 is in the holes feeding the spirals for a short distance and it relaxes as it enters the spirals, ending up at 85 kPa in the die land. Therefore, the die would work satisfactorily with this particular grade and many other grades of polyamide, with slight adjustments to the processing conditions.

5.4.11.4 PU

Polyurethane is another polymer used for making pipes and tubes for various applications, such as suction and discharge of liquids. The use of the above die for making PU pipes of ⌀50 mm, for an output level of 90 kg/h, a melt temperature of 205 °C, and a die temperature of 205 °C, gives the results shown in Table 5.17.

Table 5.17 Simulation Results for ⌀50 mm Die Using Polyurethane

		Feed section	Spiral section	Tooling section (section above the spirals)	Comments
1.	Pressure drop [MPa]	5.19	1025	3.49	18.93 (total)
2.	Shear rate max. [s^{-1}]	291	213	84	
3.	Shear stress max. [kPa]	199	133	70.50	199 is in the feed to the spirals
4.	Temperature [°C]	205–208	208–210	210	210 in the tooling section

The results in Table 5.17 are also satisfactory for the given geometry and processing conditions, therefore this die can be used for the pipes and tubes within this product range of ⌀20 mm to ⌀50 mm. Smaller diameters would have a lower output, because trying to push the same amount of material through a smaller annular section at the end would create high pressure in the die, which would make the die unstable. A high melt pressure also means a high shear rate and high shear stresses. A shear stress above 140 kPa causes melt fracture, resulting in shark skin effect on the product. Therefore, the volume output and processing conditions like the melt temperature and the die temperature must be adjusted to suit.

From the above simulation of the results, it is proven that a die made for a particular material can be used to process other materials as well, which is the desire of every manufacturing manager, but can turn out to be a nightmare for the design engineer. A fairly widespread selection of materials has been simulated above, but with a large number of materials and grades of materials available on the market, it is not possible to test every material. The die above can be classed as a general purpose pipe die and if it is required to use some other materials and grades of materials, it is suggested that the die be tried with a low output to start with; then it should be taken to the maximum permissible limit without causing any damage. It is easy to make a monolayer die as above to use with other materials and grades of materials, but this is not always possible for multilayer and special purpose dies, as will be seen later in Chapters 11, 12, and 13 under relevant sections.

5.4.12 Summary of Die Specifications and Characteristics

The above die has the specifications and characteristics shown in Table 5.18.

Table 5.18 Die Specification and Design Results

1.	Product range	The die is designed to make all sizes of tubes and pipes from Ø20 mm to Ø50 mm. The wall thickness ranges from 1 mm minimum to 5 mm.
2.	Output range	The die would work safely up to 100 kg/h for large sizes and the output would be reduced for smaller sizes, thin wall thickness, and denser materials.
3.	Materials to be processed	The die is designed as multipurpose die and has been tested for a number of materials given above. The die would run satisfactorily with many other types of polymers and polymer grades, with the exception of materials like rigid PVC. Spiral dies are not suitable for such materials and other types of distributors should be considered for such materials. For processing materials like PVDF, fluorine-containing polymers, etc. non-corrosive steels must be selected for making the die.
4.	Temperature range	The steel specified on the drawings is suitable for materials which have a processing temperature up to 270 °C. For materials with higher processing temperatures, a different grade of steel must be selected. Similarly, the mica band heaters given on the drawings should be replaced with ceramic heaters.
5.	Flange connection	The flange adapter drawing is for guidance only and the users must make the flange adapter to suit their extruder flange, flange clamp, and breaker plate.

In this chapter, the principle of spiral dies has been explained in detail and the definition of the terms used has been given. A typical design of a spiral die for pipe sizes of Ø20 mm to Ø50 mm has been illustrated using the die geometry for the largest and the smallest sizes in the range. The simulation of the die design using Compuplast software has been explained, with the results of the melt flow variables for a Ø50 mm pipe die and a Ø20 mm pipe using low density polyethylene material shown in detail. A number of different materials were also used for simulating a Ø50 mm die and described with a summary of the results. It has been shown that a die designed for one material can be used for making products in different materials. Sometimes small changes to the die geometry or processing conditions are necessary to achieve optimum results.

6 Monolayer Die for Tubes ∅1 mm to ∅6 mm

The principles of designing spiral mandrel dies for tubes and pipes are explained in Chapter 5, where a die for ∅20 mm to ∅50 mm pipe sizes was illustrated as an example. In this chapter, the design of tubes from ∅1 mm to ∅6 mm is given to cover a range of sizes, applications, and materials.

6.1 ∅1 mm to ∅6 mm Fixed Center in Line Die

This die is used for medical tubes made from different types of polymers. As explained in the previous chapters, the starting point of die design is the design brief. Therefore, information about the design scope, product range, materials to be processed, output required, size of the extruder, etc. is collected as a starting point. After collecting this information, tables of product sizes, tooling sizes using convenient factors of draw down ratios, line speed calculations, etc. are compiled as in Table 6.1. From the tooling sizes a rough design of the die is made to get the geometry information for simulation purposes. From the simulation results, the design is corrected to suit the results and finalized to meet the customer requirements as close to the design brief as possible. This approach is repeated time and again for all the designs.

6.1.1 Design Brief

The information about the required die received from a particular customer is as shown in Table 6.1.

Table 6.1 Design Brief

1.	Product	⌀1.00 mm to ⌀6.00 mm tubes.
2.	Product range (OD/ID)	⌀2.00/1.80, ⌀3.90/2.60, ⌀5.90/3.50, and ⌀6.00/4.30.
3.	Wall thickness of each product	0.30 mm, 0.65 mm, 0.95 mm, and 0.85 mm.
4.	Material or materials if more than one	LDPE, HDPE, PVC, and Nylon 12. No specific supplier and grade were specified.
5.	Rheology data (relationship of shear rates vs. viscosities at different temperatures)	No information available. Data from literature is used.
6.	Thermodynamic data ▪ Density of each material ▪ Specific heat capacity ▪ Thermal conductivity	Generic values for given materials used for simulation.
7.	Extruder details ▪ Type of extruder ▪ Screw diameter ▪ Required output ▪ Flange details ▪ Breaker plate dimensions	 ▪ Single screw ▪ 2.50 inches ▪ 45 kg/h ▪ Manufacturer's leaflet ▪ Manufacturer's leaflet
8.	Calibrator	Not available
9.	Cooling bath ▪ Dimensions ▪ Type: vacuum, spray, etc. ▪ Temperature	Not available
10.	Haul-off ▪ Make ▪ Length ▪ Belt width ▪ Speed min/max	Not available
11.	Cutter ▪ Make ▪ Length ▪ Speed min/max	Not available
12.	Winder ▪ Make ▪ Diameter ▪ Speed min/max	Not available

6.1.2 Draw Down Ratios and Tooling Sizes

Table 6.2 gives the product size and relevant tooling size.

Table 6.2 Draw Down Ratios for ⌀2–6 mm Tubes

	Tube designation	OD [mm]	ID [mm]	Wall thickness [mm]	Die ID [mm]	Pin OD [mm]	DDR	Layer thickness at material exit [mm]	Draw down ratio balance (DRB)
Single layer LDPE									
1	2	2.40	1.80	0.30	3.60	2.70	2.25	0.45	1.00
2	4	3.90	2.60	0.65	5.85	3.90	2.25	0.975	1.00
3	5	5.40	3.50	0.95	8.10	5.25	2.25	1.425	1.00
4	6	5.71	4.71	0.50	8.57	7.07	2.25	0.75	1.00
Single layer HDPE									
5	6	6.00	4.30	0.85	12.00	8.60	4.00	1.7	1.00
Single layer PVC (plasticized)									
6	6	6.00	4.30	0.85	12.00	8.60	4.00	1.7	1.00

Table 6.3 shows the calculations of the line speed for a given output.

Table 6.3 Calculations of Line Speed for Given Output

Material type	Material output [kg/h]	Density [kg/m^3]	Output volume [m^3/h]	Tube OD [mm]	Tube ID [mm]	Area of annulus [mm^2]	Length of tube per hour [m/h]	Length of tube per minute [m/min]
HDPE	25.00	762	0.0328084	2.40	1.80	2	16577	276
HDPE	38.00	762	0.04986877	3.86	2.54	7	7516	125
HDPE	40.00	762	0.05249344	5.40	3.50	13	3952	66
HDPE	45.00	762	0.05905512	5.71	4.71	8	7216	120
LDPE	45.00	951	0.04731861	6.00	4.30	14	3441	57
PVC	35.00	1120	0.03125	6.00	4.30	14	2272	38

6.1.3 Design Procedure

Table 6.2 is used for starting the design from the tooling end and this information is used for the simulation as well. From the design brief in Table 6.1 it was evident that the output required by the customer is 45 kg/h (the maximum plasticizing

capacity of the extruder). This level of output is used for the largest size of tooling and smaller sizes of the tube would have less output, because of the high shear stress in the land area of the die annulus. Table 6.3 shows that a 45 kg/h output for a tube size of 5.71 mm in outside diameter and 4.71 mm in inside diameter will give a line speed of 120 m/min, whereas a tube of 2.40 mm in outside diameter and 1.80 mm in inside diameter will give a line speed of 276 m/min. It must be checked with the customer if their equipment would be capable of handling such a high line speed. The draw down ratio, which determines the tooling size and the level of output, can be changed from the simulation results, when the performance of the whole die is optimized.

From the above information, a rough design of the die is made to establish the initial dimensions of the die geometry. This die geometry along with the material information and the processing conditions are inserted into the simulation software to get the simulation results. The results are then checked and the design is changed to optimize the processing results in terms of the pressure drop in the die, shear rate, shear stress, residence time, etc., so that the ultimate die design meets the customer expectations and gives the most suitable results. This exercise, as explained in the previous chapter, is completed for all the sizes of the tubes and specified materials to be processed. The final design of the die for this particular customer is shown in Figure 6.1 and Figure 6.2.

The die shown in Figure 6.1 and Figure 6.2 is based on the 2 mm tube tooling as specified in Table 6.2. The die is designed for precision medical tubes, where the tooling is semi-fixed center; in other words, the pin is inserted into a concentric mandrel and it fits tightly on the taper in the mandrel. The die has a very slight radial adjustment on the die carrier (08), as shown in Figure 6.1. The whole idea is that once the small radial adjustment to get an even wall thickness of the tube is made, then the die adjustment should be locked in place. Any further tool changes should be made without the necessity of any adjustment to get an even wall thickness of the products. As the pin is inserted in the mandrel from the front, removing the pin for tool changing would be difficult unless the whole die is dismantled.

To facilitate the quick tool changes, a pin pusher plug (12) and a pin pusher bolt (13) are placed in the die design. The winding in of the pin pusher bolt would push the pin pusher plug outward, which would release the pin from its taper in the mandrel. For inserting the new pin into the mandrel, the pin pusher bolt (13) is wound outward. For replacing the die, the die adjusting nut (09) in the front is removed first and then the die is pushed out with a slight movement of the melt from the extruder. In this way, a quick and easy tool changing is accomplished.

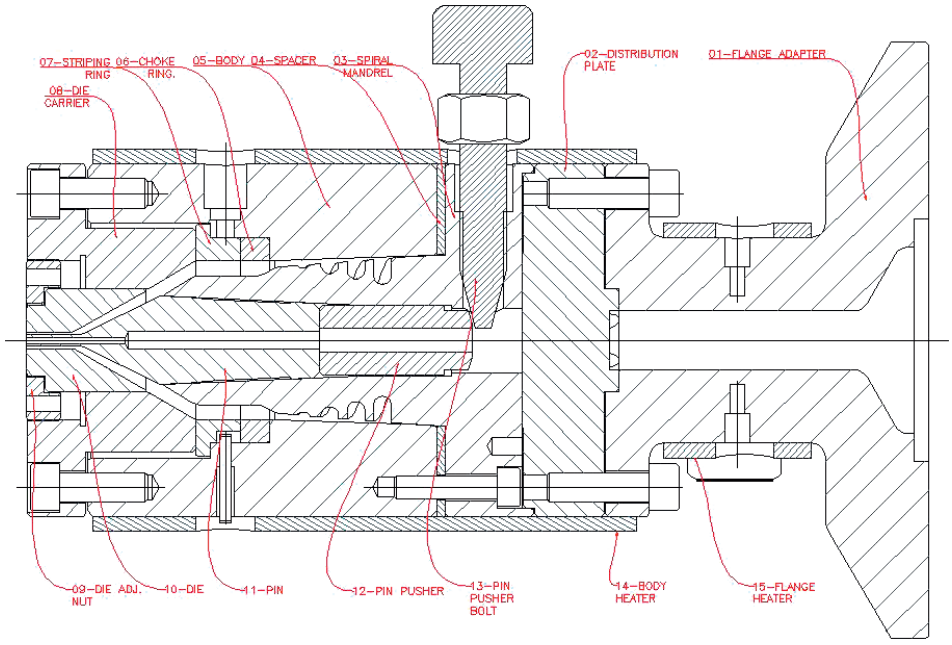

Figure 6.1 Sectional view of 2–6 mm tube dies, showing 2 mm pin and die in place and a mechanism for pushing the pin out

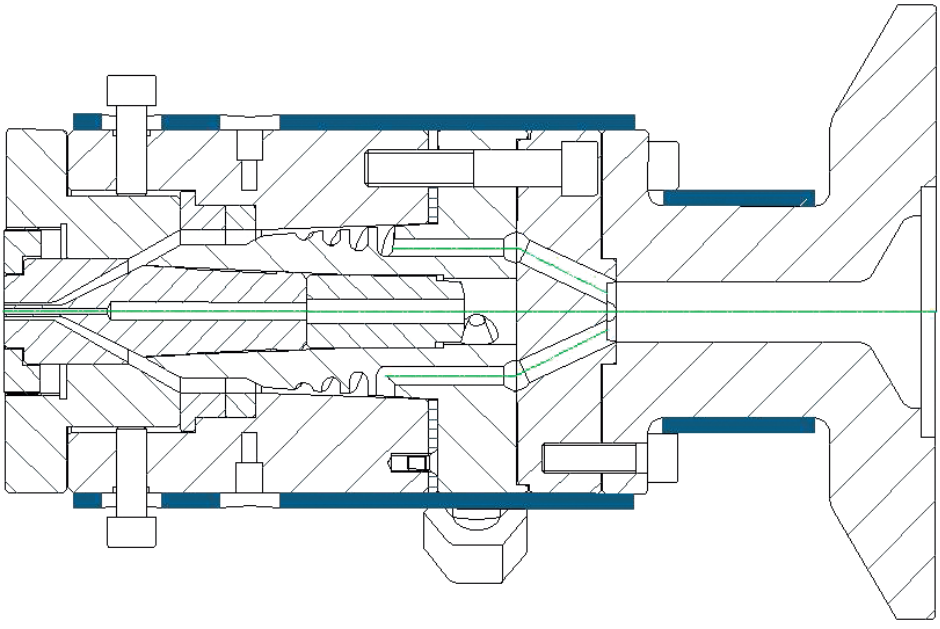

Figure 6.2 Sectional view of 2–6 mm tube dies, showing 2 mm pin and die in place and feed of melt into the spirals

This type of arrangement is not conventional, but it works well for small diameter tubes of thin wall. For a larger size of tubes where more die adjustment is required, the design of a conventional arrangement—as shown in the previous chapter—is more suitable.

The results of the simulation are shown in the following section.

6.1.4 Die Simulation (⌀2 mm Tube)

As explained in Chapter 5, the following data input is required for the simulation software[1]:

6.1.4.1 Die Geometry

The die geometry is divided into three sections: (1) the feed section, (2) the body and mandrel section, including the spirals, and (3) the annuli section—namely, the part above the spiral section, including the tooling section.

6.1.4.1.1 Feed Section

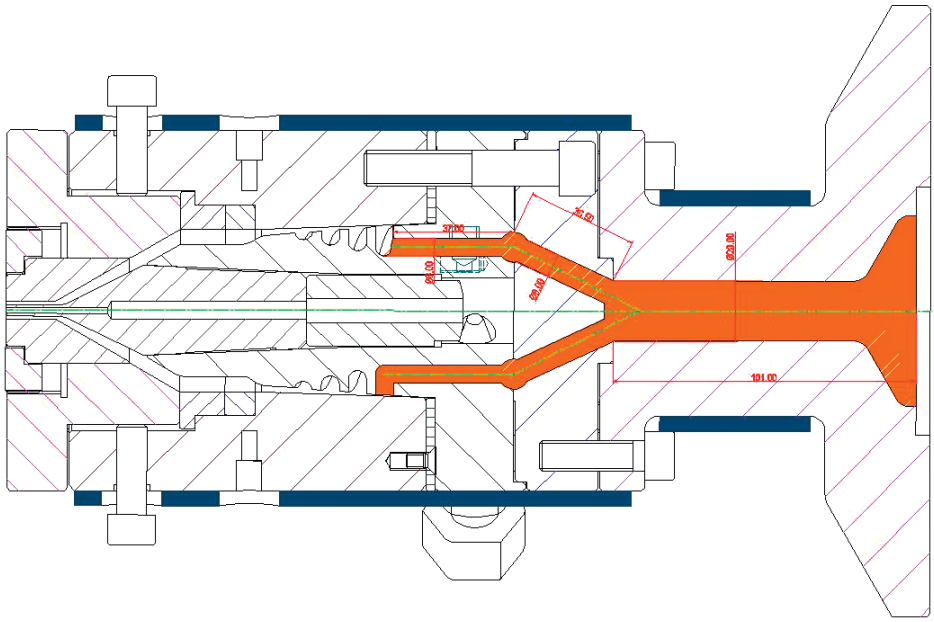

Figure 6.3 Feed section showing geometry and dimensions

[1] The simulation results in this chapter are obtained from Compuplast® software for Spiral Die Module.

Figure 6.3 shows the geometry dimensions of the feed section. The feed section is divided into three sections and the details of the three sections are given in Table 6.4.

Table 6.4 Information of Feed Section as Inserted into the Software

Section #	Splits	L [mm]	L/D	D [mm]	S [mm^2]
01	1	101.00	5.05000	20.000	314.159
02	4	36.50	4.56250	8.000	50.2655
03	4	37.00	6.16667	6.000	28.2743

The first column in Table 6.4 is the number of the sections in the feed part of the die, 01 being close to the extruder, 03 being the section that feeds the melt directly into the spirals, and 02 the intermediary section. The second column shows the number of branches in each section. The third column is the length of each part of the feed section. The fourth column is the ratio of the length in the third column to the diameter in the fifth column, which is calculated by the software.

The sixth column is the cross-sectional area of each section and is also calculated by the software. The cross-sectional area of section 01 should not be less than the total area of either section 02 or 03. For example, the cross-sectional area of each branch of section 02 is 50.2655 mm^2 and there are 4 branches in this section; therefore, the total cross-sectional area of the 4 branches is equal to 201.062 mm^2; which is less than 314.159 mm^2 of section 01. Similarly, the total cross-sectional area of section 03 is a lot smaller than section 02.

6.1.4.1.2 Distribution Section

The section after the feed section of the die and before the annuli is classed as distribution section. As its name implies, the purpose of this section is to evenly distribute the melt around the circumference of the gap between the body and the mandrel. The main elements of geometry of this section are the body inside diameter and length, the mandrel diameter and length, and the spirals dimensions, as shown in Figure 6.4.

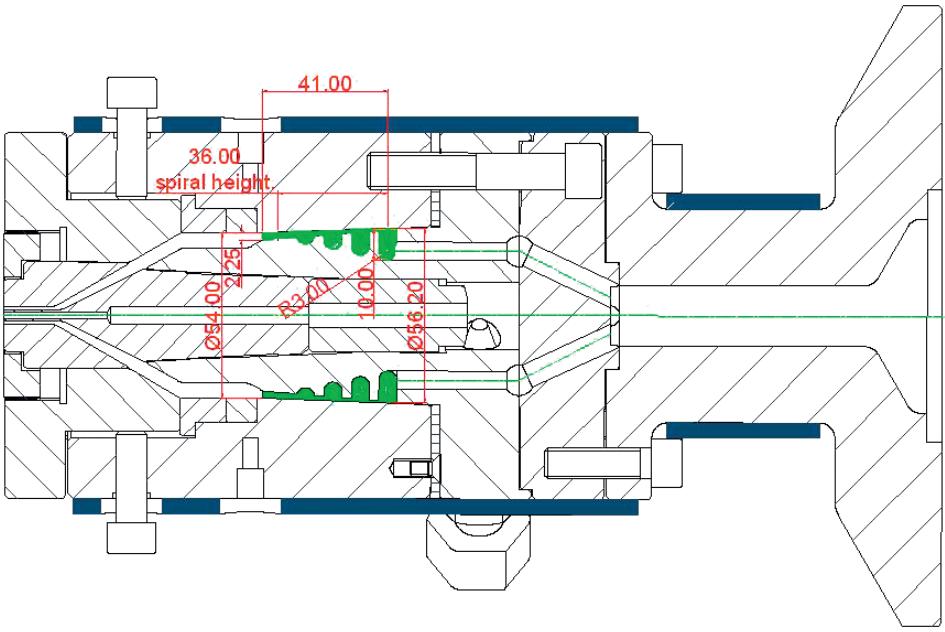

Figure 6.4 Distribution section showing geometry and dimensions

The important dimensions for the distribution section are as shown in Table 6.5.

Table 6.5 Information of Distribution Section as Inserted into the Software

	# Name	Dimension	Description
1.	Reference diameter	⌀56.20 mm	Diameter of the body and the mandrel at the start of the spirals.
2.	Spiral height	36.00 mm	Distance from the middle of the start of the spiral to the end of the spiral.
3.	Depth of spiral	10.00 mm	Depth of the start of the spiral.
4.	Spiral radius R	3.00 mm	Radius at the bottom of the first spiral.
5.	Gap at the end	2.25 mm	Gap between the body and the mandrel at the end of the spiral. Usually measured at 5.00 mm after the spiral height.
6.	Number of ports	4	Usually the minimum number of ports is 4 and the maximum can be 12 depending upon the size of the die.
7.	Number of overlaps	4	Usually the number of overlaps is the same as the number of ports. This means that each spiral goes round the circumference one full turn.

6.1.4.1.3 Annuli or Tooling Section

The section above the mandrel is shown in Figure 6.5. All the dimensions necessary for the simulation software are clearly marked and are shown in Table 6.6.

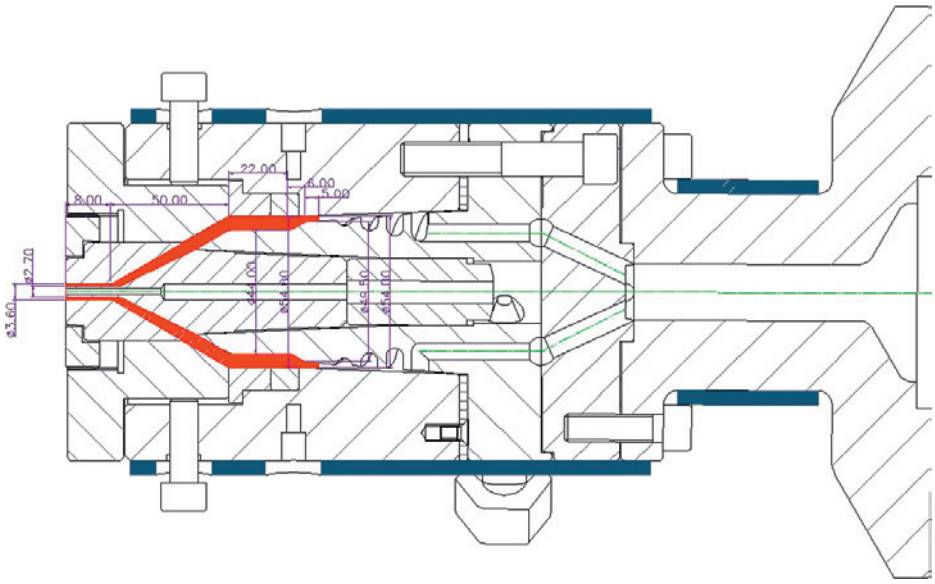

Figure 6.5 Annuli or tooling section showing geometry and dimensions

Table 6.6 Dimensions of Annuli Section as Inserted into the Software

#	D [mm]	H [mm]	dH [mm]	Gb [mm]	Ge [mm]
01	51.7500	5.0000	5.0000	2.25000	2.2500
02	49.0000	11.0000	6.0000	2.25000	5.0000
03	49.0000	33.0000	22.0000	5.0000	5.0000
04	3.1500	83.0000	50.0000	5.0000	0.4500
05	3.1500	91.0000	8.0000	0.4500	0.4500

The dimensions of the annuli or tooling section are given in Table 6.6. The first column (#) denotes the number of the section. The second column (D) is the mean diameter of the section as in Figure 6.5: the outside diameter at the beginning of the section is 54.00 mm and inside diameter is 50.00 mm, therefore the mean diameter is 52.00 mm. Column 3 (H) is the height from the beginning to the next section; column 4 (dH) is the height of the section; Gb is the gap at the beginning and Ge is the gap at the end (columns 5 and 6, respectively).

This completes the geometry input into the software and the next task is to input the project definition, consisting of the material information and the processing conditions.

6.1.4.2 Project Definition

6.1.4.2.1 Material Information

The material information consists of the data provided in Table 6.7.

Table 6.7 Material Information

Material name	Polyethylene, PVC, nylon, etc.
Material grade	HDPE, LDPE, flexible PVC, nylon 12, etc.
Rheology data	Temperatures, shear rates, and viscosities corresponding to shear rate at each temperature.
Thermodynamic properties in solid state	Melt temperature, freezing temperature, density, specific heat capacity, thermal conductivity, and specific heat of fusion.
Thermodynamic properties of melt	Density, specific heat capacity, and thermal conductivity.

As no specific material information other than generic names was available from the customer in this case, the material data values for LDPE—made by Sabic and grade Sabic 2100TN00—of known rheology data are used.

6.1.4.2.2 Processing Conditions

The processing conditions are the material output rate, the material temperature, and the die temperature. In the simulation of the die, it is assumed that the processing conditions on the extruder are already satisfactory to deliver a homogeneous melt to the die. Therefore, the only processing conditions concerning the die are the melt temperature from the extruder and the die body temperature. These processing conditions are set in accordance with the guidelines of the material suppliers and can differ from grade to grade of the same material type and also for other types of materials. For instance, the die temperature and melt temperatures for HDPE and LDPE are normally in the region of 210 °C to 230 °C, and for PVC the temperatures are in the region of 160 °C to 185 °C. The material output and the processing conditions are tweaked by an experienced process engineer to optimize the processing.

The following information for the die under discussion has been put into the software:

- Output rate (MFR): 20 kg/h
- Input melt temperature: 220 °C
- Body temperature: 220 °C

6.1.4.3 Simulation Results

The software simulates the flow characteristics of the die and the results are shown separately for the three sections described above—namely, the feed section, the distribution section or spiral mandrel part, and the tooling section or annuli—as follows:

6.1.4.3.1 Feed Section

The feed section is as shown in Figure 6.3, further divided into 3 sections as shows Table 6.8.

Table 6.8 Simulation Results of Variables in the Feed Section

Section #	Δp [MPa]	ΔP [MPa]	T [°C]	Shear rate [s^{-1}]	Shear stress [kPa]	Velocity [mm/s]
1	0.5928	18.681	220.34	12.233	29.312	23.207
2	0.9316	18.089	220.85	50.493	51.001	36.261
3	1.7229	17.157	221.77	124.17	69.784	64.464

The first column in Table 6.8 is the section number; Δp is the pressure drop in a particular section; ΔP is the total pressure drop in the die from the beginning of this section; T is the temperature at the end of each section; the fifth column is the shear rate at the wall of each section; the sixth column is the shear stress at the tube of each section; and the last column is the average velocity in the section.

Looking at the results in Table 6.8, the observations are as follows: the total pressure drop in the feed section is 3.2473 MPa, the temperature rise due to the shear of the melt in this section is 1.77 °C, the minimum shear rate is 12.233 s^{-1} and the maximum 124.17 s^{-1}, the minimum shear stress is 29.312 kPa and the maximum 69.784 kPa, and they are all satisfactory. The minimum shear stress set as a rule of thumb is 30 kPa and in this case the shear stress of 29.312 kPa is very close to the minimum requirement. Therefore, the small difference can be ignored and the geometry of this section is acceptable.

6.1.4.3.2 Distribution Section or Spiral Mandrel Part

The software gives detailed results in each section of the overlap. In the die described above, there are 4 ports and 4 overlaps; therefore, the software gives results in 4 sections of overlaps. For simplicity, the results at the beginning of the first part of the spiral mandrel and the end of the spiral mandrel are listed in Table 6.9.

Table 6.9 Simulation Results of Variables in the Distribution Section

#	ΔP [MPa]	q1 [cm^3/s]	q2 [cm^3/s]	T [°C]	Shear rate [s^{-1}]	Shear stress [kPa]
Beginning of channel	15.434	1.8222	0.0005	221.78	67.74	56.553
Gap over the channel	15.434	0.0002	0.0002	220.00	5.1604	20.010
Section at the spirals	11.566	0.0034	0.1844	222.22	71.107	57.386

The first column (#) in Table 6.9 is the section description; ΔP is the total pressure drop in the die from the beginning of this section; q1 is the melt flow in the spiral direction; q2 is the melt leakage from the spiral; T is the temperature at the end of each section; the sixth column is the shear rate at the wall of each section; and the last column is the shear stress at the tube of each section.

From the results in Table 6.9 it is clear that the pressure drop in the spiral mandrel section is 3.87 Mpa, the temperature change is less than 1 °C, and the shear rate and the shear stress are well within the required values. The software also shows the volumetric flow distribution around the circumference: the minimum value is 0.176 cm^3/s and the maximum value is 0.187 cm^3/s, which gives the variation of flow rate around the circumference of ± 2.95 %. A flow variation of ± 4 % or below is regarded as satisfactory.

6.1.4.3.3 Tooling Section (Annuli)

The third and last section includes all the area from the end of the spiral mandrel to the melt exit. This section is shown in Figure 6.5 and is divided into 5 sections according to changes in geometry from one section to the next, as shown in Table 6.6. The flow characteristic values of each section at the start are listed in Table 6.10 (the end values are the same as the start of the next section).

Table 6.10 Simulation Results of Variables in the Tooling Section

	P [MPa]	q1 [cm^3/s]	q2 [cm^3/s]	T [°C]	Shear rate [s^{-1}]	Shear stress [kPa]
Section#1						
Start	11.566	0.0025	0.1825	222.19	74.694	58.405
Section#2						
Start	11.305	0.0019	0.1819	222.14	29.466	41.412
Section#3						
Start	11.168	0.0030	0.1820	221.99	15.763	32.283
Section#4						
Start	10884	0.0002	0.1823	222.35	104.14	65.460
Section#5						
Start	8.4813	−0.001	0.1827	226.53	38209	**238.29**

From the results in Table 6.10, the melt flow through the annuli is satisfactory up to the last section, where the shear stress is 238.29 kPa. The „magical“ figure for the shear stress is 140 kPa maximum, above which melt fracture takes place, resulting in the shark skin effect on the product. Therefore, this section as it stands is not satisfactory and a number of remedial actions can be taken as follows:

1. Increase the temperature in the annuli section
2. Change the draw down ratio to increase the annular gap between the inside diameter of the die and outside diameter of the pin
3. Lower the output
4. A combination of some or all of the above

Since the simulation software treats the annular section as an integral part of the whole die and the temperature is set as body temperature for the whole die, trying any different temperature for this section is out of the scope of the software. Therefore, a different approach is adopted for finding the right solution for this section. The above mentioned software comes with a calculator for simple solutions and is very useful for solving problems of this nature.

6.1.4.3.4 Correction of Tooling Section

For the simulation of the die under discussion, the processing conditions have been set as follows:

- Output rate (MFR): 20 kg/h
- Input melt temperature: 220 °C
- Body temperature: 220 °C

From Figure 6.5, the geometry of the die is as follows:

- Inside diameter of the die = 3.60 mm
- Outside diameter of the pin = 2.70 mm
- Die land length = 8.00 mm

The above annuli geometry and processing conditions have resulted in a very high shear stress. Using the „Extrusion calculator,“ which is a part of the software, and varying the geometry and the processing conditions for the same grade of the material, the following geometry and processing conditions have resulted in satisfactory processing conditions:

- Output rate (MFR): 10 kg/h
- Input melt temperature: 220 °C
- Body temperature: 282 °C

Annuli adjusted geometry:

- Inside diameter of the die = 5.377 mm
- Outside diameter of the pin = 3.96 mm
- Die land length = 9.00 mm

The processing results are as follows:

- Pressure drop in the land = 3.46 MPa
- Average velocity = 351 mm/s
- Average shear rate = 5361.25 s^{-1}
- Average shear stress = 136.23 kPa

From the above corrections and results it can be concluded that the die would perform satisfactorily with certain changes to the geometry and processing conditions. The changes in geometry mean that the draw down ratio has to be increased to 4.84 : 1 and the draw down ratio balance has to be applied to 98 %. The draw down ratio and the draw down ratio balance have been explained in Chapter 3. The draw down ratio of 4.84 : 1 would result in a die inside diameter of 5.28 mm and the outside diameter of the pin would be of 3.96 mm, resulting in an annular gap of 0.66 mm. Further adjustment to the draw dawn ratio balance would result in a die inside diameter as above and an annular gap of 0.71 mm. The changes in the processing conditions result in a rise of the temperature at the die tip to 282 °C. This increase of temperature at the die tip would not affect the product quality, but would give a better finish to the outside of the product. The residence time in the die land is 0.026 seconds, which means that such a small residence time in the die tip would not increase the temperature of the melt exiting from the die, but would eliminate the sticking of the melt to the die wall caused by the high shear stress, as in the previous case.

It should be noted that there would be an appreciable decrease in the output from 20 kg/h to 10 kg/h for a satisfactory product. The average velocity of 351 mm/s would result in a line speed of 21 meters per minute. There would be slight differences in the performance of this die with different types of materials for the same size of tubes with the same set of tooling. An experienced engineer who follows the above approach of optimizing the processing conditions and changes to the geometry would be able to make the necessary adjustments for different grades of the same material or different types of materials, as it is not possible to give the results of all the materials.

The above die head is designed to cover a range of tubes from 2 mm in diameter to 6 mm in diameter; therefore, rather than showing the simulation of each and every size of the tubes, the simulation of the largest size in the range is shown below. The intermediary sizes of the tubes would work satisfactory with the same die head by changing the tooling part only from the dimensions given in the draw down ratios table (Table 6.2).

6.1.5 Die Simulation (∅6 mm Tube)

For the simulation of a ∅6 mm tube die, the geometry of the first two sections (i. e., the feed section and the distribution section) are common for this die head; therefore, the geometry input for these two sections would be the same as above. The tooling section is replaced by the new tooling section, as shown in Figure 6.6.

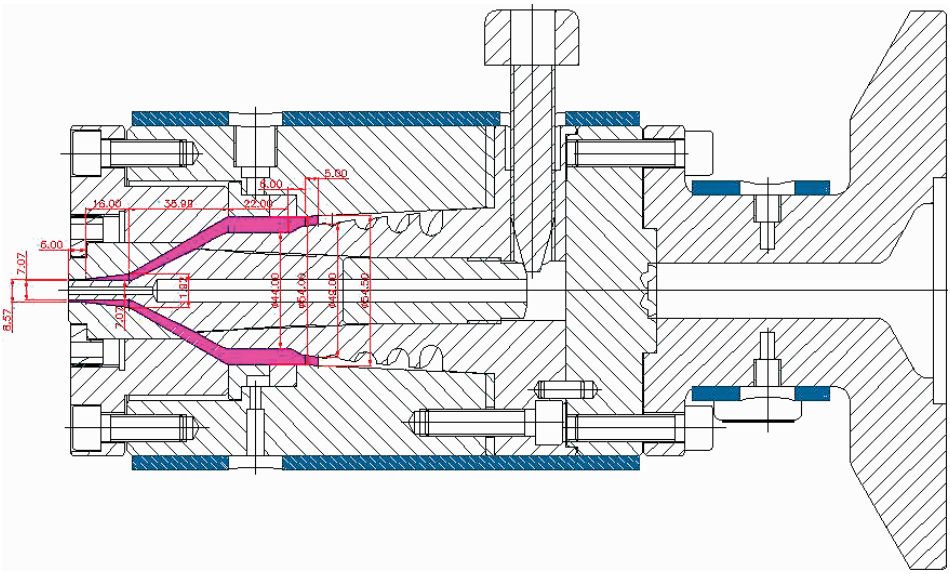

Figure 6.6 Annuli or tooling section showing geometry and dimensions of ∅6.00 mm tube

6.1.5.1 Die Geometry

6.1.5.1.1 Dimensions of Feed Section

See Section 6.1.4.1.1.

6.1.5.1.2 Dimensions of Distribution Section

See Section 6.1.4.1.2.

6.1.5.1.3 Dimensions of Tooling Section

The dimensions of the new tooling section as inserted in the software for simulation purposes are listed in Table 6.11.

Table 6.11 Dimensions on Annuli for ⌀6 mm Tubes

#	D [mm]	H [mm]	dH [mm]	Gb [mm]	Ge [mm]
01	52.0000	5.00000	5.00000	3.75000	3.75000
02	49.0000	11.0000	6.00000	3.75000	7.00000
03	49.0000	33.0000	22.0000	7.00000	7.00000
04	9.44900	69.0000	36.0000	7.00000	4.75000
05	7.82000	85.0000	16.0000	4.75000	0.750000
06	7.82000	91.000	6.00000	0.75000	0.75000

6.1.5.2 Project Definition

For a detailed explanation on the project definition see Section 6.1.4.2.

6.1.5.2.1 Material Information

The material information is the same as in Section 6.1.4.2.1. Material: LDPE grade Sabic 2100TN00.

6.1.5.2.2 Processing Conditions

All the information on the processing conditions is as in Section 6.1.4.2.2 except for the following input data:

- Output rate (MFR): 45 kg/h
- Input melt temperature: 220 °C
- Die body temperature: 220 °C

6.1.5.3 Simulation Results

The simulation results of the flow characteristics for the three sections are as follows:

6.1.5.3.1 Feed Section

The simulation results for the feed section are as shown in Table 6.12.

Table 6.12 Simulation Results of Variables in the Feed Section for ⌀6 mm Tubes

Section #	Δp [MPa]	ΔP [MPa]	T [°C]	Shear rate [s^{-1}]	Shear stress [kPa]	Velocity [mm/s]
1	0.83269	14.0684	220.475	28.4239	41.1782	52.2162
2	1.25565	13.2357	221.173	117.649	68.7397	81.5878
3	2.26582	11.9801	222.416	91.7690	94.9412	145.045

Looking at the results in Table 6.12, it can be seen that the total pressure drop in the feed section is 2.088 MPa, the temperature variation due to the shear stress at the wall of this section is 1.94 °C, the minimum shear rate is 28.42 s^{-1} and the maximum 117.649 s^{-1}, and the minimum shear stress is 41.178 kPa and the maximum 94.94 kPa. All these results are satisfactory; therefore, there is no problem in this section.

6.1.5.3.2 Distribution Section or Spiral Mandrel Part

As explained in Section 6.1.4.3.2, the software gives a detailed analysis of each section of the overlap. For simplicity, the minimum, the average, and the maximum values of the variables are examined as listed in Table 6.13.

Table 6.13 Simulation Results of Variables in the Distribution Section for ⌀6 mm Tubes

Variable	Minimum	Average	Maximum	Critical
Flow in main direction [cm^3/s]	0.00041	0.226	0.4514	
Flow in channel direction [cm^3/s]	0.00041	0.220	0.4514	
Velocity in main direction [mm/s]	0.0000	26.35	52.698	
Velocity in channel direction [mm/s]	−14.5533	17.43	49.4100	
Temperature [°C]	220.00	221.78	223.568	
Pressure drop [MPa]	4.573	7.14	9.714	20
Shear rate in the body [s^{-1}]	5.46	182.88	359.110	10
Shear rate in the mandrel [s^{-1}]	1.0000	180.53	359.110	10
Shear stress in the body [kPa]	20.52	58.58	96.63	min. 30/ max. 140
Shear stress in the mandrel [kPa]	9.01	96.63	52.82	min. 30/ max. 140
Flow variation at the end of spirals		0.4101 cm^3/s ± 2.89 %		± 4.0 %

From the results in Table 6.13 it can be concluded that the pressure drop is well below the critical level. The critical value of pressure drop is 20 MPa for the whole die head from the extruder end to the melt exit. The pressure drop in the feed section above was 2.088 MPa and in the spiral mandrel it is 9.714 MPa. The total pressure drop through the die is 14.0684 MPa as shown in the above section; this means that 4.573 MPa is the pressure drop through the tooling section above the spirals.

The minimum critical value of shear rate is 10 s^{-1}. In this case 5.46 s^{-1} is only at the beginning of the spiral and the tubes before the start of the spiral have a shear rate of 289.68 s^{-1}; as the average shear rate in the body and mandrel is around 180 s^{-1}, this value is ignored.

The minimum critical shear stress value is 30 kPa and the value of 20.52 kPa in the beginning of the spiral can also be ignored, as the average value of 58.58 kPa is higher than the minimum critical value. The maximum value of shear stress, 96.63 kPa, is lower than the maximum critical value of 140 kPa, above which melt fracture takes place.

The flow variation at the end of the spirals being ±2.89% means that the melt distribution at the end of the spirals is good. Therefore, the above die so far is satisfactory for a 45 kg/h output at the set values of melt and die body temperatures of 220 °C.

6.1.5.3.3 Tooling Section (Annuli)

The new tooling section as shown in Figure 6.6 and the dimensions for this section are shown in Table 6.11. This section is divided into 6 subsections, as shown in Table 6.11, and the results of the simulation are as shown in Table 6.14 for the above mentioned processing conditions.

Table 6.14 Simulation Results of Variables in the Tooling Section for ∅6 mm Tubes

Variable	Minimum	Average	Maximum
Flow rate [cm^3/s]	0.40	0.408	0.416
Velocity [mm/s]	1.771	24.317	46.863
Temperature [°C]	223.39	224.10	224.81
Pressure drop [MPa]	0.00	2.29	4.58
Shear rate [s^{-1}]	24.90	1563.64	3102.39
Shear stress [kPa]	38.56	100.61	**162.65**

From the results in Table 6.14, the most concerning result is the maximum shear stress of 162.65 kPa, which occurs at the last part of this section, before the melt exit. As the critical value is 140 kPa, above which the melt fracture takes place resulting in shark skin, some fine tuning in this area is needed to reduce the shear stress below the critical value. By tweaking the processing conditions, it was found that the following processing conditions give satisfactory results:

- Output: 42 kg/h
- Melt temperature: 230 °C
- Die body temperature: 245 °C

The new processing conditions had the effect on the shear stress in the tooling section shown in Table 6.15.

Table 6.15 Shear Stress in the Tooling Section

Variable	Minimum	Average	Maximum
Shear stress [kPa]	39.90	85.18	139.46

The maximum value of shear stress being below the critical value, it can be concluded that the die designed above would meet the required customer expectations very closely with a little fine tuning. The same die was tested with other materials like HDPE, PVC, and Nylon 12 and it was found to give satisfactory results. Therefore, the design of the die is finalized.

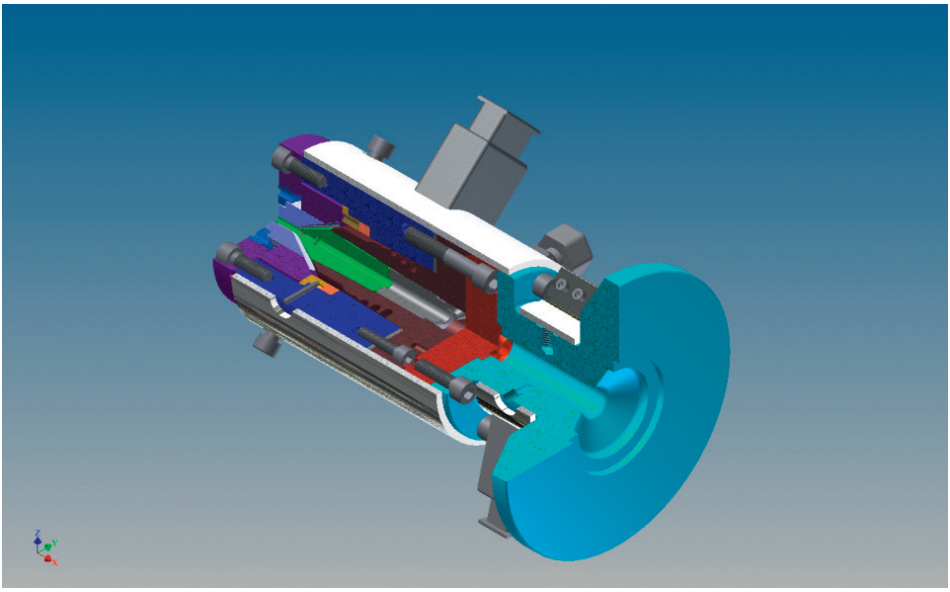

Figure 6.7 3D sectional view of the complete die head

7 Monolayer Die for Tubes ∅4 mm to ∅16 mm

Chapter 6 showed the design of a special fixed center die used for the manufacturing of medical tubes in LDPE, HDPE, Nylon, and PVC (plasticized). The design of the pin and the die were not conventional and were specially designed to suit a particular customer requirement. This chapter shows a conventional die design used for most in-line pipe and tube dies. This die is designed for a range of tubes for many applications made from thermoplastic polyurethanes (TPUs) including elastomeric materials that bridge the gap between flexible rubber and rigid plastics. The die can also be used for a number of other thermoplastics, such as LDPE, HDPE, ABS, Nylon, plasticized PVC, and many others. It covers a full range of tubes from diameters 4 mm to 16 mm of various wall thicknesses. For the design of the die the same steps as described in the previous chapters will be followed:

1. Design brief outlining the design scope, product range, materials to be processed, output requirements, equipment used, and any other special requirements
2. Table of products sizes and draw down ratios giving tooling information for each size (i.e., inside bore of the die and outside diameter of the pin)
3. Table of output in kilograms per hour and resultant line speed
4. Rough design of the die for simulation
5. Collect necessary material information (i.e., rheology data and thermodynamic properties) for simulation
6. Simulate the die performance linking geometry to the processing conditions
7. Analyze the results and correct the design as necessary
8. Prepare and publish detailed drawings for manufacturing

The information regarding product, materials, processing conditions, equipment, etc. is collected and shown in Table 7.1.

Table 7.1 Design Brief

1.	Product	General purpose tubes of diameters 4.00 to 16 mm.
2.	Product range	See Table 7.2 giving outside and inside diameters of the tubes.
3.	Wall thickness of each product	See Table 7.2 giving wall thicknesses of the tubes.
4.	Materials used	Preferred material is TPU Grade Estane® 58887 from Lubrizol, but other tube grades of materials like LDPE, HDPE, Nylon 12, and PVC to be tested using the same die geometry.
5.	Rheology data	Obtained from the manufacturer of Estane® by the customer and supplied for die design.
6.	Thermodynamic properties	Thermodynamic properties for the above grade obtained from the material manufacturer.
7.	Extruder	⌀45 mm general purpose screw extruder capable of plasticizing 45 kg/h of LDPE.
8.	Calibrator	The customer makes own calibrators in-house and adjusts them to suit the processing conditions.
9.	Cooling bath	Adequate vacuum bath and spray cooling facility from the customer.
10.	Haul-off	Not applicable for die design
11.	Cutter	Not applicable for die design
12.	Winder	Not applicable for die design

Table 7.2 gives the product size and relevant tooling size.

Table 7.2 Draw Down Ratios and Tooling Sizes

Tube spec. (OD/ID)	Tube OD [mm]	Tube ID [mm]	Wall thickness [mm]	Die ID [mm]	Pin OD [mm]	DDR	Layer thickness at die exit [mm]
4/2.50	4.00	2.50	0.75	6.00	3.75	2.25	1.125
5/3	5.00	3.00	1.00	7.50	4.50	2.25	1.50
6/4	6.00	4.00	1.00	8.40	5.60	1.96	1.40
8/6	8.00	6.00	1.00	11.20	8.40	1.96	1.40
8/5.50	8.00	5.50	1.25	11.20	7.70	1.96	1.75
10/7	10.00	7.00	1.50	13.00	9.60	1.44	1.95
10/8	10.00	8.00	1.00	14.00	11.20	1.96	1.40
12/8	12.00	8.00	2.00	14.40	9.60	1.44	2.40
12/9	12.00	9.00	1.50	15.60	11.70	1.69	1.95
16/12	16.00	12.00	2.00	19.20	14.40	1.44	2.40

Table 7.3 shows the calculations of the output and the line speed.

Table 7.3 Output and Line Speed Calculations (Based on PU)

Tube spec.	Material output [kg/h]	Density [kg/m^3]	Output volume [m^3/h]	Tube OD [mm]	Tube ID [mm]	Section area [mm^2]	Line speed [m/h]	Line speed [m/min]
16/12	40.00	1119	0.0357462	16.00	12.00	87.96	406	6.77
12/8	40.00	1119	0.0357462	12.00	8.00	62.83	569	9.48
12/9	40.00	1119	0.0357462	12.00	9.00	49.48	722	12.04
10/8	35.00	1119	0.0312779	10.00	8.00	28.27	1106	18.44
10/7	40.00	1119	0.0357462	10.00	7.00	40.06	892	14.87
8/5.5	30.00	1119	0.0268097	8.00	5.50	26.51	1011	16.86
8/6	30.00	1119	0.0268097	8.00	6.00	21.99	1219	20.32
6/4	25.00	1119	0.0223414	6.00	4.00	15.71	1422	23.70
5/3	20.00	1119	0.0178731	5.00	3.00	12.57	1422	23.70
4/2.5	15.00	1119	0.0134048	4.00	2.50	7.66	1751	29.18

The calculations in Table 7.3 are based on polyurethane of density of 1119 kg/m^3; the line speed of other polymers like LDPE (density 930 kg/m^3), HDPE (density 954 kg/m^3), or PVC (density 1400 kg/m^3) can be calculated if required. All values of density are based on solids density, because the tube or pipe sizes are all as in the finished product. The die under discussion was designed firstly for polyurethane and then its suitability for other polymers was checked. The information from Table 7.3 is used for simulation for die design and this information can also be used for production planning.

7.1 Initial Die Design

From the tooling sizes taken from Table 7.2, initially the die is designed for the largest diameter of tubes of size 16 mm OD and 12 mm ID, as shown in Figure 7.1. Then the design is changed with the smallest size of tooling in place, as shown in Figure 7.2, to ensure that the design looks right. In the next stage, as described in the previous chapter, the die with the largest size tooling and the one with the smallest size tooling are simulated using the die geometry, material data, and appropriate processing conditions. As the product range in this case is large, the die with mid-size tooling can also be simulated to ensure the overall performance of the die. The drawings of the largest size tooling and the smallest size tooling are shown in Figure 7.1 and Figure 7.2, respectively.

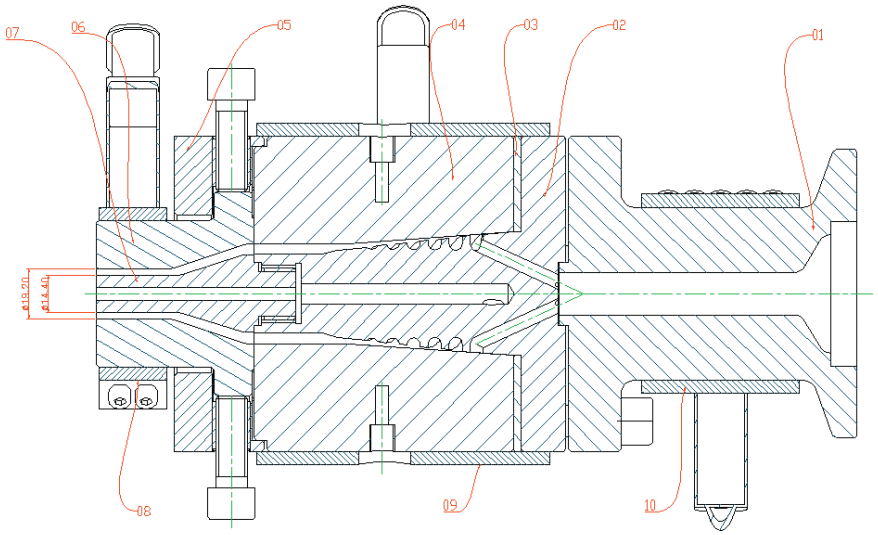

Figure 7.1 Die drawing showing Ø16/12 tube tooling in place

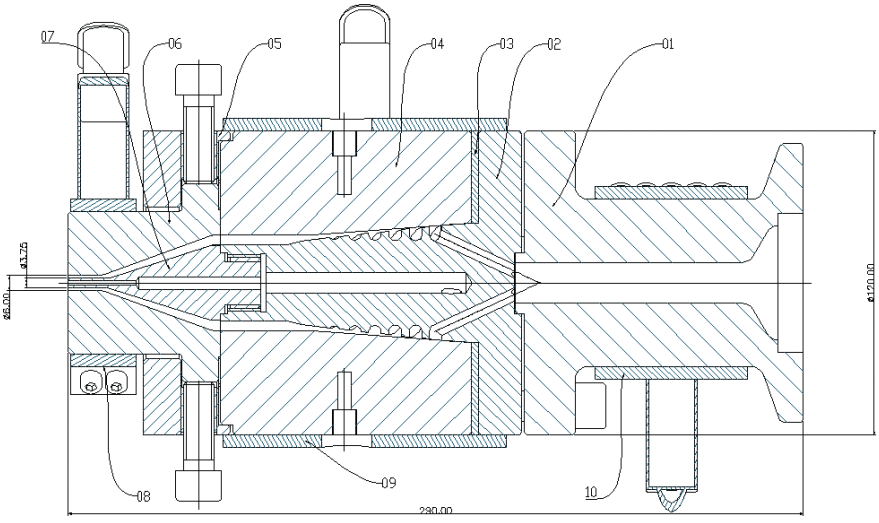

Figure 7.2 Die drawing showing Ø4/2.50 tube tooling in place

The names of the parts from the drawings in Figure 7.1 and Figure 7.2 are listed in Table 7.4 for reference.

Table 7.4 Part Names

Part no.	Part name
01.	Flange adapter
02.	Spiral mandrel
03.	Mandrel spacer
04.	Body
05.	Die-adjusting ring
06.	Die bush (die)
07.	Pin
08.	Die heater
09.	Body heater
10.	Flange heater

From the drawings in Figure 7.1 and Figure 7.2, the geometry of the three sections—namely, the feed section, the distribution section, and the section above the distribution or above the spiral mandrel—as described in the previous chapters, is taken for simulation purposes. The detailed geometry of each section is given below.

7.1.1 Feed Section

The drawing in Figure 7.3 gives the geometry dimensions of this section. The feed section in this case is divided into two sections and the dimensions are listed in Table 7.5. The first section is part of the flange adapter and is a straight section of Ø20 mm and 114 mm long. This section is further divided into 6 branches to feed 6 spirals in the mandrel. Each of these branches is of Ø5.00 mm and 33.50 mm long.

Table 7.5 Die Dimensions of Feed Section

# Section	Splits	L [mm]	L/D	D [mm]	S [mm^2]
01	1	114.00	7.1250	16.000	201.062
02	6	33.50	6.7000	5.000	19.6350

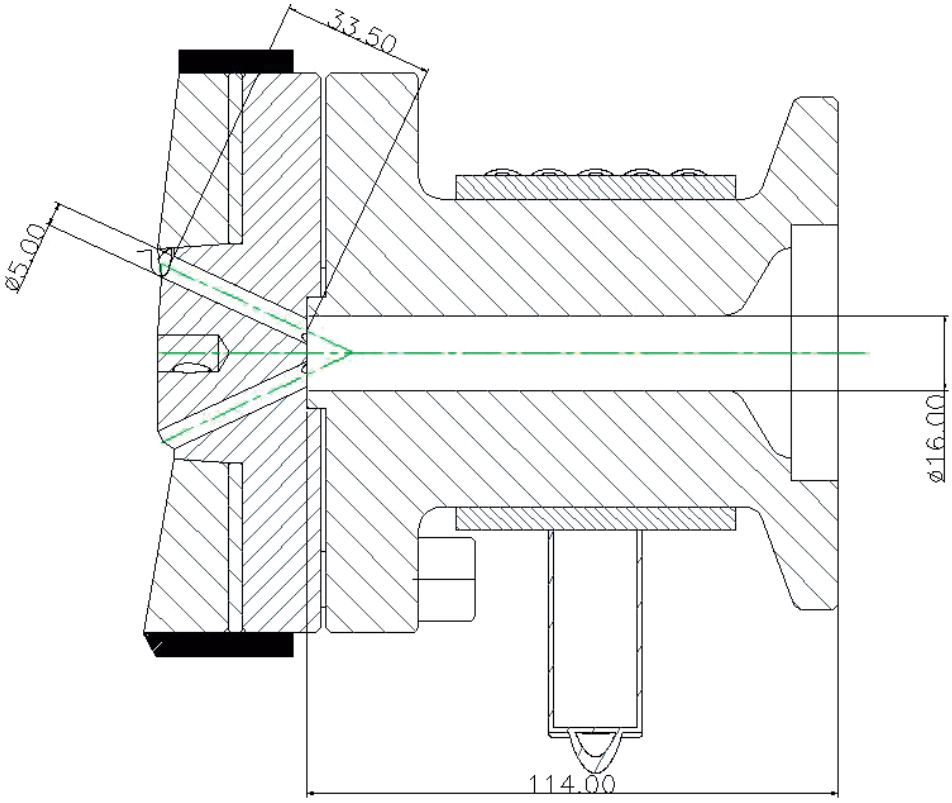

Figure 7.3 Die drawing showing dimensions of feed section

7.1.2 Distribution or Spiral Mandrel Section

As described in the previous chapters, the geometry of this section relates to the geometry of the die body and the mandrel—part 4 and part 2, respectively, in Figure 7.1 and Figure 7.2. The dimensions of the distribution section are shown in Figure 7.4 and in Table 7.6.

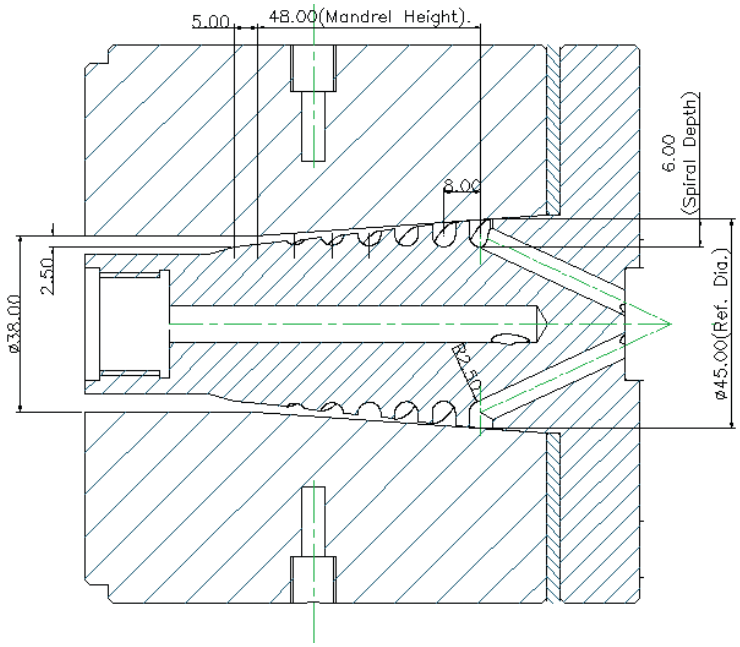

Figure 7.4 Die drawing showing dimensions of distribution section

Table 7.6 Dimensions of Distribution Section

	# Name	Dimension	Description
1.	Reference diameter	ø45.00 mm	Diameter of the body at the start of the spirals.
2.	Spiral height	48.00 mm	Distance from the middle of the start of the spiral to the middle of the end of the spiral.
3.	Spiral depth	6.00 mm	Depth at the start of the spiral.
4.	Spiral radius	2.50 mm	Radius at the bottom of the spirals.
5.	Gap at the end of the spiral	2.50 mm	Gap between the body and the mandrel at the end of the spiral. Usually measured at 5.00 mm after the end of the spiral.
6.	Number of ports	6	Number of ports feeding the spirals.
7.	Number of overlaps	6	The number of overlaps is usually the same as the number of spirals unless otherwise stated.

7.1.3 Annuli or Tooling Section

This is the section above the spiral mandrel and the dimensions of this section, which are necessary to put in the simulation software, are shown in Figure 7.5 and in Table 7.7.

Table 7.7 Dimensions of the Section above the Mandrel (as They Are Put into the Simulation Software)

#	D [mm]	H [mm]	dH [mm]	Gb [mm]	Ge [mm]
01	35.0000	5.0000	5.0000	2.50000	2.50000
02	34.0000	10.0000	5.0000	2.50000	3.00000
03	33.0000	40.0000	30.0000	3.00000	3.00000
04	16.8000	73.0000	33.0000	3.00000	2.40000
05	16.8000	97.0000	24.0000	2.40000	2.40000

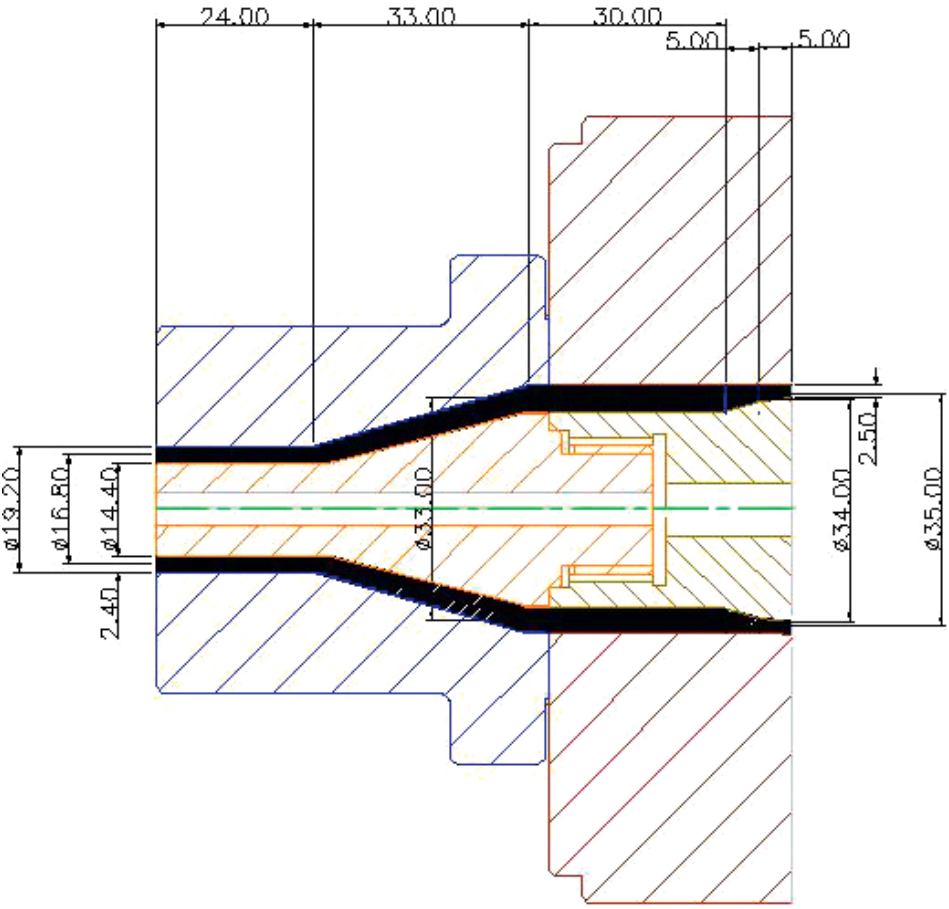

Figure 7.5 Die drawing showing dimensions of section above the spiral mandrel

The first column (#) in Table 7.7 is the number of sections above the spiral mandrel. The second column, D, is the mean diameter of each of the sections. The third column, H, is the height from the beginning or above the spiral mandrel and dH is

the height of each section. Gb is the gap at the beginning of the section and Ge is the gap at the end of the section.

This completes the input of the geometry of all the sections of the die into the software. This die geometry is linked with the project definition consisting of the material data and processing conditions to simulate the flow characteristics of the polymer melt in the die.

7.2 Project Definition

7.2.1 Material Information

The information in Table 7.8, appertaining to the material, is defined and evaluated using the software. In this case a specific material was indicated by the customer; therefore, the information concerning this material is listed in Table 7.8.

Table 7.8 Material Information

Material name	Thermoplastic polyurethane (TPU).
Material grade	Estane® 58887 Nat. 038 from Lubrizol™.
Rheology data	Values of shear rate [s^{-1}] vs. viscosity [Pa·s] supplied by the manufacturer. These raw values are put into the software as apparent values, and the software applies the Rabinowitsch correction to convert them into true values.
Thermodynamic properties in solid state	The values of melt temperature, freezing temperature, solid density, specific heat capacity, thermal conductivity, and specific heat of fusion were supplied by the manufacturer of the material.
Thermodynamic properties of melt	Melt density, specific heat capacity, and thermal conductivity are supplied by the manufacturer.

The rheology data and the thermodynamic properties of other materials used to simulate the dies have been collected from various sources, such as material suppliers, laboratory tests, and Campus®. These values have been saved in the software for die simulation.

7.2.2 Processing Conditions

Material output rates are taken from Table 7.3 and in this case 45 kg/h is used for simulation, as well as a melt temperature of 195 °C and a die temperature of 190 °C. This completes the input of data into the software, and then the software runs the simulation and lists the end results.

7.3 Simulation Results

After the input of the die geometry, and linking it with processing conditions in the project data, the software simulates the melt flow characteristics in the die. These results, as described in the previous chapters, are listed for all three sections of the die above (i. e., the feed section, the distribution section, and the tooling section immediately after the spiral mandrel). These results for each section are compared with the set values in the software and the necessary corrections to the die are applied where necessary. The results are listed with some comments to the suitability of each section as follows.

7.3.1 Feed Section

The feed section, as shown in Figure 7.3, is divided into two parts, the first part being a straight section of ⌀16 mm × 114 mm long, which is further divided into 6 sections of ⌀5.00 mm × 33.50 mm long. The flow characteristics of the melt through the two sections are shown in Table 7.9.

Table 7.9 Simulation Results of Variables in the Feed Section (⌀16 mm, TPU)

Section #	Δp [MPa]	ΔP [MPa]	T [°C]	Shear rate [s^{-1}]	Shear stress [kPa]	Velocity [mm/s]
1	0.85638	14.6350	194.935	33.2785	30.0160	63.5684
2	2.94231	13.7786	195.952	194.385	109.684	108.490

The first column in Table 7.9 is the section number; Δp is the pressure drop in the section; ΔP is the total pressure drop in the die; T is the temperature at the end of each section; the fifth column is the shear rate at the wall of each section; the sixth column is the shear stress in each section; and the last column is the average velocity of the melt in each section.

From the results in Table 7.9, it can be seen that the pressure drop in section #1 is 0.85638 MPa and in section #2 is 2.94231 MPa. The total pressure drop in the feed section is 3.799 MPa and the total pressure drop through the die is 14.635 MPa, which is quite a moderate pressure drop, as the set limit is 20 MPa. The changes in the temperature in the two sections are self-explanatory, as the melt temperature from the extruder entering the first section is 195 °C and the body temperature is set at 190 °C. Therefore, there is a slight drop in the temperature in the first section and it rises in the second section by about 1 °C due to shear stress in the six narrow tubes of the second section. The shear rate and shear stress in both sections

are satisfactory, as the values for shear rate should not be less than 10 s^{-1} and the shear stress should not be less than 30 kPa or more than 140 kPa. Therefore, the geometry of the feed section is satisfactory.

7.3.2 Distribution Section or Spiral Mandrel

The die in question, as described above, has 6 ports feeding 6 spirals and each spiral is making a full turn around the circumference, which means it has 6 overlaps. As stated in the previous chapters, the software gives detailed analysis of the flow characteristics in every part of the spiral section—namely, the channel, the gap over the channel, and the gap over the land of each spiral. From the die design point of view some of the information is superfluous, therefore only the important information is listed as follows.

- Pressure drop: The pressure drop from the beginning of the spirals through the rest of the die is the same as at the end of the feed section shown above, which is 10.835 MPa, and at the end of the spirals it is 5.6697 MPa, which is the pressure drop through the section after the spirals part of the mandrel.
- Temperature change: The temperature at the beginning of the spirals is the same as at the end of the feed section, which is 195.95 °C, and at the end of the spirals it is 195.25 °C. Therefore, there is very little change in the temperature of the melt going through the spirals.
- Shear rate: The shear rate at the end of the feed section, from above, was 194.38 s^{-1}; and as the melt enters the spirals the shear rate drops slightly, due to the melt finding more room in the spirals than in the tubes feeding the spirals. As the spirals are getting shallower toward the end and more and more melt is being squeezed into the gap above the spirals, the shear rate in the channel is decreasing and the shear rate in the gap above is increasing. The shear rate at the end section of the spirals is 5.09 s^{-1} in the channel and 115.57 s^{-1} in the gap over the channel. The shear rate at the end of the spirals over the land is 195.08 s^{-1}. The minimum shear rate value required, as stated above, was 8 s^{-1}. The simulated shear rate in the section at the end of the spirals is 5.09 s^{-1}; this low shear rate is not of much concern in this case, because the shear rate in the gap over the channel is 115.57 s^{-1}. The combined effect is more than adequate to avoid any stagnation in this area.
- Shear stress: The shear stress in all areas of the die is very important, because it is the shear stress what causes the rubbing effect on the die, on one hand. On the other hand, a high shear stress causes melt fracture. The minimum value for design purposes is 30 kPa and the maximum 140 kPa. The shear stress at the beginning of the spirals is 75.039 kPa, and at the end of the spirals and in the gap over the land it is 55.712 kPa. Any fluctuations in between the start and the

end of the spirals can be ignored for practical purposes, as the melt is moving in the axial direction.

- Melt flow: In the spiral section of the mandrel the melt stream is divided into two parts, one flowing in the direction of the spiral and the other is leakage from the spirals. To demonstrate the importance of the melt flow in the spiral mandrel and its effect on the design of a good (and a bad) spiral mandrel geometry, a number of values of the melt flow in the spiral direction and the leakage were taken from the simulation results in the software. These values are plotted on a graph as shown in Figure 7.6.

  The most important observation is the shape of the curves. As it can be seen from Figure 7.6, the melt flow in the channel direction is a well-balanced smooth curve. As it would be expected, the value of the melt flow at the beginning of the channels is at its maximum. As the channel is getting shallower and shallower, the melt flow is leaking into the gap over the channel. The melt leakage from the channels starts with an almost zero value, peaks in the middle, and diminishes in the main direction at the end of the spirals. If the peak of this curve is to the left, it means that the melt is leaking too early out of the channels, which is caused by the excessive gap between the body and the mandrel at the end of the spirals. The result of this would be that the distribution of the melt around the circumference of the mandrel would vary excessively. On the other hand, if the peak of the curve is more to the right, it means that the leakage from the spiral is late due to an insufficient gap between the body and the mandrel at the end of the spirals. This would cause a high pressure drop in the mandrel and the rest of the system, which could make the die unstable.
- Flow rate at mandrel exit: The average flow rate at the mandrel exit is 0.2145 cm^3/s with a variation of ± 1.73 %. The maximum limit of this variation is ± 4 % for a good die design.

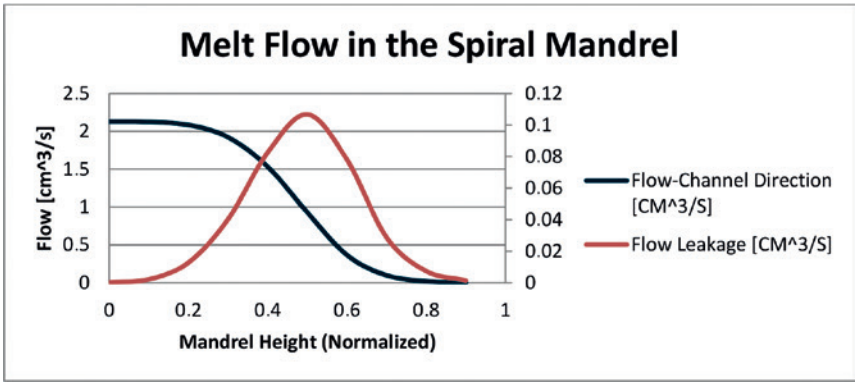

Figure 7.6 Comparison of flow in the channel direction and flow leakage in the spiral mandrel (the mandrel height has been normalized so that 0 is the start of the spirals and 1 is the end of the spirals)

7.3.3 Sections Past the Mandrel

The third part of the die consists of all the parts after the mandrel. The geometry of this section is shown in Figure 7.5, and this geometry is divided in 5 sections as detailed above. The processing conditions for this section are the same as for the whole die detailed above. The simulation results for all the five sections are listed in Table 7.10.

Table 7.10 Simulation Results of Variables in the Sections Past the Mandrel (⌀16 mm, TPU)

Section #	ΔP [MPa]	q1 [cm^3/s]	q2 [cm^3/s]	T [°C]	Shear rate [s^{-1}]	Shear stress [kPa]
Start #1	5.6697	0.0001	0.2147	195.22	111.37	63.809
Start #2	5.4145	0.0002	0.2138	195.18	102.79	60.759
Start #3	5.1935	0.0004	0.2132	194.94	88.313	55.602
Start #4	4.0816	0.0000	0.2133	195.00	148.01	76.862
Start #5	2.2033	0.0000	0.2133	195.42	282.03	110.22

- Total pressure drop through the section above the mandrel: 5.6681 MPa
- Flow variation at the die exit: ±0.14 %
- Total pressure drop through the die: 14.634 MPa

The results in this section are all within the set parameters; therefore no further adjustment to this die is required.

7.4 ⌀4.00 mm Tube Die

The design of a ⌀16 mm tube die is completed above with its simulation results for thermoplastic polyurethane. The design exercise is not yet complete, because in the design brief it was stated that the die is to be designed for all sizes of tubes from ⌀4.00 mm to ⌀16 mm; therefore, how suitable the design would be for making tubes of smaller diameter is not known.

There are 10 sizes of tubes listed in Table 7.2. To give the design of all 10 sizes with their simulated results would be a repetition of a lot of the work, therefore the design and simulation of the smallest size in the range is given below. The results of the other sizes have been checked to ensure the capability of the die to make all other sizes. The die designs from Figure 7.1 and Figure 7.2 are similar except for the parts 6 (die) and 7 (pin), and the other two sections (i. e., the feed section and the distribution or spiral mandrel section) are common to all sizes. Therefore, the geometry of the pin and the die are changed for simulation purposes. For the pro-

ject part in the simulation, the material output is changed as listed in Table 7.3. Figure 7.7 shows the important dimensions of the section above the spiral mandrel and it must be noted that the dimensions marked with * are common for the whole die and for all the sizes of the tubes. Therefore, these dimensions are repeated in the software for simulating the ⌀4 mm tube die. The new dimensions for the software are listed in Table 7.11.

Table 7.11 Dimensions of the Section above the Mandrel for ⌀4 mm Tubes (as They Are Put into the Simulation Software)

#	D [mm]	H [mm]	dH [mm]	Gb [mm]	Ge [mm]
01	35.0000	5.0000	5.0000	2.50000	2.50000
02	34.0000	10.0000	5.0000	2.50000	3.00000
03	33.0000	40.0000	30.0000	3.00000	3.00000
04	4.8750	83.4000	43.4000	3.00000	1.12500
05	4.8750	97.0000	13.6000	1.12500	1.12500

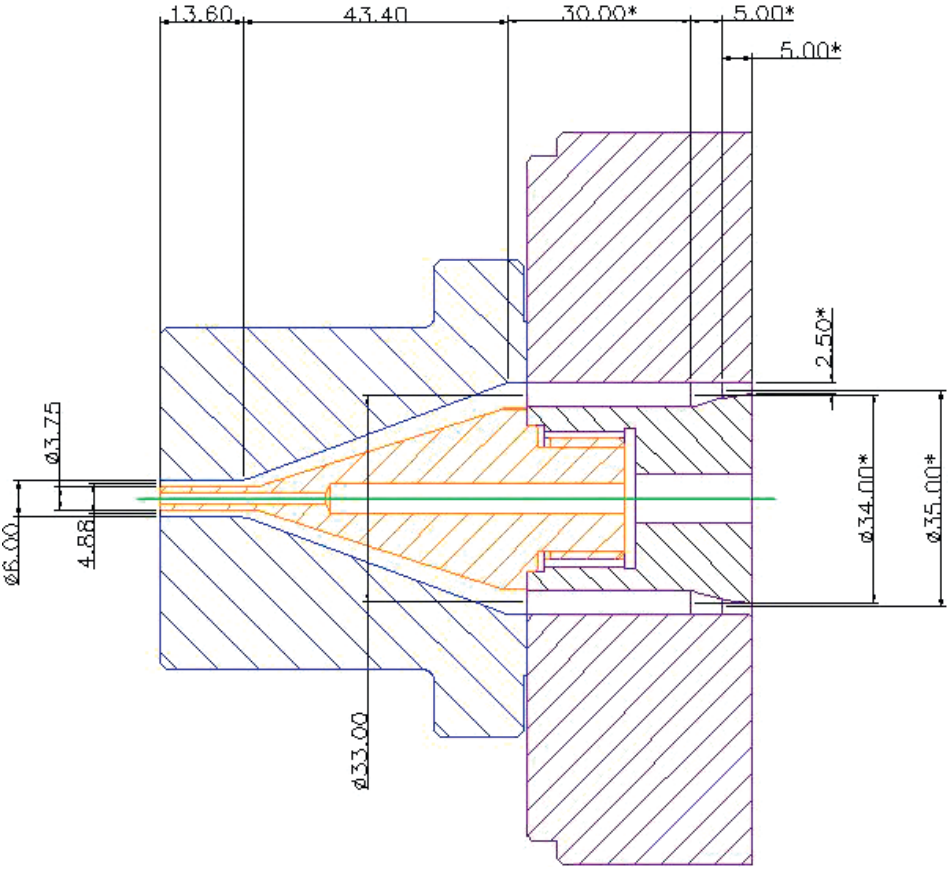

Figure 7.7 Die drawing showing dimensions of section above the spiral mandrel for ⌀4 mm tubes

The only change in the processing conditions is the output, which is changed to 15 kg/h, and the simulation results are as follows:

7.4.1 Feed Section

The results of the above changes to the die geometry have shown the changes in the feed section listed in Table 7.12.

Table 7.12 Simulation Results of Variables in the Feed Section (⌀4 mm, TPU)

Section #	△p [MPa]	△P [MPa]	T [°C]	Shear rate [s^{-1}]	Shear stress [kPa]	Velocity [mm/s]
1	0.3283	13.229	195.13	10.873	11.516	21.189
2	1.2965	12.901	195.65	61.670	48.352	36.163

- Total pressure drop in feed section: 1.6248 MPa

It is noted that the shear stress in the first section is below the desired level of 30 kPa. When designing a die for multiple sizes, some compromise has to be made for flexibility as long as it does not have a drastic effect on the processing of the material and the end product. The part affected is the flange adapter, as shown in Figure 7.3, and if it is seen that the low shear stress in this area is causing any problem to the product quality, a new part with reduced bore can be made and fitted to the die.

7.4.2 Distribution Section or Spiral Mandrel

The following changes, as a result of changing the material output for the ⌀4.00 mm tube tooling, have occurred in the distribution section:

- Pressure drop: The pressure at the beginning of the spirals is 11.605 MPa and at the end of the spirals it is 9.279 MPa. Therefore, the pressure drop through the spirals is 2.326 MPa.
- Temperature change: No significant temperature changes have been recorded. The minimum temperature noted in some parts of the channels is 195 °C and the maximum is 196 °C over the land between the channels.
- Shear rate: Due to low output, the minimum shear rate in some parts of the channel is found to be slight below the minimum limit of 8 s^{-1} and above the maximum of 60 s^{-1}.
- Shear stress: There are fluctuations in the level of shear stress in parts of the channels and the gaps over the channels, but the average shear stress is above 30 kPa.

- Melt flow: The melt flow is related to the output and varies according to the section geometry. The average melt flow at the mandrel exit is shown to be 0.070 cm^3/s.
- Melt flow variation: At the mandrel exit the melt flow variation around the circumference is ± 1.45 %.

From the results above the flow through the spiral mandrel is as good as can be expected from a die designed to cover such a large product range.

7.4.3 Sections Past the Mandrel

The simulation results for the five sections past the spiral mandrel are shown in Table 7.13.

Table 7.13 Simulation Results of Variables in the Sections Past the Mandrel (⌀4 mm, TPU)

Section #	△P [MPa]	q1 [cm^3/s]	q2 [cm^3/s]	T [°C]	Shear rate [s^{-1}]	Shear stress [kPa]
Start #1	9.2784	0.0001	0.0714	195.80	35.59	27.70
Start #2	9.1676	0.0000	0.0712	195.79	32.898	26.09
Start #3	9.0728	0.0000	0.0710	195.75	28.34	23.29
Start #4	8.6070	0.0000	0.0710	196.27	108.30	60.79
Start #5	6.0488	0.0000	0.0710	198.39	1501.80	**250.28**

As can be seen from the results in Table 7.13, the pressure drop through the five sections above the mandrel is 9.278 MPa, and the change in temperature is about 3 °C. The shear rate increases suddenly in the last part of the tooling, which is the die land area, and similarly the shear stress shoots up to an unacceptable level and would result in melt fracture causing shark skin on the end product. Therefore, some action at the design stage needs to be taken.

As shown in the previous chapter, there are several ways to overcome this problem and the first one is to increase the draw down ratio. In this case a DDR of 4 : 1 was tried and the results were still not satisfactory. Therefore, the temperature of the die tip was increased within the limits. By trial and error, it was found that the above draw down ratio and a 204 °C die tip temperature solve the problem. This resulted in a shear rate of 733 s^{-1} and a shear stress of 139 kPa, which is within the limits. This kind of problem is more common with small diameter tubes of thin walls and high velocity. Therefore, these corrections are necessary for small diameter tubes. Similar corrections to some other small size tube tooling may be necessary.

7.5 Other Materials

It was stated in the design brief (Table 7.1) that the die must perform well with other materials—namely, LDPE, HDPE, Nylon 12, and flexible PVC. The die geometry above is tested with these materials for the largest and the smallest sizes of the tubes, and the results are tabulated below.

7.5.1 LDPE

To test the performance of the above die, the project information and the processing conditions used in the previous case have to be redefined and changed in the software to simulate the flow characteristics through the die. In other words, the rheological and thermodynamic properties of the selected grade of LDPE have to be put into the software. The melt temperature and the die temperature are also changed in the processing conditions of LDPE. The die geometry is kept the same as given above. From the simulated results, sometimes it is necessary to change the tooling (i.e., pin and die) to get satisfactory results. In this case the following material and processing conditions for LDPE have been put into the software:

Processing Conditions

- Material: LDPE, general grade of 1 MFI is selected.
- Melt temperature: 220–230 °C is used.
- Die temperature: 220–230 °C is used.
- Output: As the density of LDPE is about 18% less than the one of TPU used above, the output is reduced accordingly. In the case of ∅16 mm tubes the output is reduced to 30 kg/h and in the case of ∅4 mm tubes an output of 12 kg/h is used.
- Draw down ratio and draw down ratio balance: The DDR for ∅16 mm tubes tooling is kept the same as in the previous case and different DDR and DRB are applied to ∅4 mm tubes tooling to get satisfactory results.

7.5.1.1 Simulation Results of ∅16 mm Tube Die

By changing the above project information and processing conditions in the software the following results are achieved in all three sections of the die:

7.5.1.1.1 Feed Section

The simulation results of the variables in the feed section are shown in Table 7.14.

Table 7.14 Simulation Results of Variables in the Feed Section (⌀16 mm, LDPE)

Section #	Δp [MPa]	ΔP [MPa]	T [°C]	Shear rate [s^{-1}]	Shear stress [kPa]	Velocity [mm/s]
1	1.2597	19.21	230.73	29.47	44.18	55.26
2	3.5598	17.96	232.76	186.59	132.71	94.31

- Total pressure drop in feed section: 4.8195 MPa

7.5.1.1.2 Distribution Section or Spiral Mandrel

- Pressure drop: The pressure drop from the beginning of the spirals through the rest of the die is the same as at the end of the feed section shown above, which is 17.96 MPa, and at the end of the spirals it is 7.336 MPa, which is the pressure drop through the section after the spirals part of the mandrel. Therefore, the total pressure drop through the spiral section is 10.624 MPa.
- Temperature change: The temperature at the end of the spirals is 235 °C—an increase of 2.25 °C.
- Shear rate: The maximum shear rate in the channel is 163.43 s^{-1} and the minimum is 1.1 s^{-1}. The shear rate in the gap over the land has a maximum of 148.84 s^{-1} and a minimum of 93.86 s^{-1}.
- Shear stress: The shear stress at the beginning of the spirals is 101.80 kPa and at the end of the spirals and in the gap over the land it is 77.27 kPa. Any fluctuations in between the start and the end of the spirals can be ignored for practical purposes.
- Flow rate at mandrel exit: The average flow rate at the mandrel exit is 0.185 cm^3/s with a variation of ± 1.8 %. The maximum limit of this variation is ± 4 % for a good die design.

7.5.1.1.3 Sections Past the Mandrel

The simulation results for the five sections past the spiral mandrel are shown in Table 7.15.

Table 7.15 Simulation Results of Variables in the Sections Past the Mandrel (⌀16 mm, LDPE)

Section #	ΔP [MPa]	q1 [cm^3/s]	q2 [cm^3/s]	T [°C]	Shear rate [s^{-1}]	Shear stress [kPa]
Start #1	7.34	0.0000	0.185	233.90	94.919	84.311
Start #2	6.99	0.0000	0.185	233.92	88.17	80.73
Start #3	6.705	0.0000	0.185	233.95	76.25	74.00
Start #4	5.225	0.0000	0.185	234.43	128.18	99.76
Start #5	2.787	0.0000	0.185	235.35	244.60	139.39

- Melt flow distribution at the die lip: 0.185 cm^3/s
- Variation of melt flow at the die exit: ± 0.04 %

From the above results it can be concluded that the above die is suitable for making LDPE tubes of ⌀16 mm at an output rate of 30 kg/h, at the melt temperature of 230 °C and a die temperature of 230 °C, without making any changes to the die geometry.

7.5.1.2 Simulation Results of ⌀4 mm Tube Die

By changing the die geometry for a ⌀4 mm tube pin and die (from Figure 7.7) in the above project and with the processing conditions as defined above, the following results are achieved in the software in all three sections of the die:

7.5.1.2.1 Feed Section

The simulation results of the variables in the feed section are shown in Table 7.16.

Table 7.16 Simulation Results of Variables in the Feed Section (⌀4 mm, LDPE)

Section #	Δp [MPa]	ΔP [MPa]	T [°C]	Shear rate [s^{-1}]	Shear stress [kPa]	Velocity [mm/s]
1	0.6265	15.78	230.36	12.38	21.97	23.95
2	2.1982	15.155	231.60	73.90	81.98	40.87

- Total pressure drop in feed section: 2.825 MPa

7.5.1.2.2 Distribution Section or Spiral Mandrel

- Pressure drop: The pressure drop from the beginning of the spirals through the rest of the die is the same as at the end of the feed section shown above, which is 12.96 MPa, and at the end of the spirals it is 8.94 MPa, which is the pressure drop through the section after the spirals part of the mandrel. Therefore, the total pressure drop through the spiral section is 4.02 MPa.

- Temperature change: The temperature at the end of the spirals is 231.78 °C; this means that there is virtually no change in the melt temperature through the spirals.
- Shear rate: The maximum shear rate in the channel is 69.75 s^{-1} and the minimum is 1.0 s^{-1}. The shear rate in the gap over the land has a maximum of 61.57 s^{-1} and a minimum of 1.55 s^{-1}.
- Shear stress: The shear stress at the beginning of the spirals is 61.62 kPa and at the end of the spirals and in the gap over the land it is 45.27 kPa. Any fluctuations in between the start and the end of the spirals can be ignored for practical purposes.
- Flow rate at mandrel exit: The average flow rate at the mandrel exit is 0.080 cm^3/s with a variation of ± 1.61 %. The maximum limit of this variation is ± 4 % for a good die design.

7.5.1.2.3 Sections Past the Mandrel

The simulation results for the five sections past the spiral mandrel are shown in Table 7.17.

Table 7.17 Simulation Results of Variables in the Sections Past the Mandrel (⌀4 mm, LDPE)

Section #	ΔP [MPa]	q1 [cm^3/s]	q2 [cm^3/s]	T [°C]	Shear rate [s^{-1}]	Shear stress [kPa]
Start #1	8.76	0.0000	0.080	231.77	40.82	50.31
Start #2	8.56	0.0000	0.080	231.75	37.69	47.73
Start #3	8.39	0.0000	0.080	231.65	32.43	43.13
Start #4	7.52	0.0000	0.080	232.40	100.21	87.77
Start #5	4.14	0.0000	0.080	234.33	719.60	**228.51**

- Total pressure drop through the above section: 8.76 MPa
- Melt flow distribution at the die lip: 0.080 cm^3/s
- Variation of melt flow at the die exit: ± 0.15 %

Section #5 shown in Table 7.17 has a problem, as the shear stress is well above the limit of 140 kPa, above which melt fracture takes place. Therefore, as explained in the previous chapter, a corrective action has to be taken. Changing the DDR to 6.25 : 1 and using a DRB of 1.075 would give a die inside diameter of 10.75 mm and a pin diameter of 6.25 mm; keeping the land length unchanged to 13.60 mm and changing the die tip temperature to 240 °C reduces the shear stress to 137 kPa, which is just below the prescribed limit of 140 kPa. Similar corrections to other tooling for small diameter tubes may be necessary.

7.5.2 HDPE

To check the performance of the die using HDPE, material data and processing conditions are changed initially, keeping the die geometry the same as in the case of LDPE for both sizes of the tubes (i.e., ⌀16 mm and ⌀4 mm). The following processing conditions were used:

Processing Conditions

- Material: HDPE – 0.1 MFI film grade.
- Melt temperature: 220 °C.
- Die temperature: 220 °C.
- Output: 40 kg/h for ⌀16 mm tubes and 12 kg/h for ⌀4.00 mm were tried.
- Draw down ratio and draw down ratio balance: The same DDR as specified in Table 7.2 was used for ⌀16 mm tubes, and the DDR and DRB used in the case of LDPE for ⌀4.00 mm tubes were tried; adjustments, if necessary, would be made.

7.5.2.1 Simulation Results of ⌀16 mm Tube Die

By using the geometry and processing conditions described, the following results from the simulation were noted in all three sections of the die:

7.5.2.1.1 Feed Section

The simulation results of the variables in the feed section are shown in Table 7.18.

Table 7.18 Simulation Results of Variables in the Feed Section (⌀16 mm, HDPE)

Section #	Δp [MPa]	ΔP [MPa]	T [°C]	Shear rate [s^{-1}]	Shear stress [kPa]	Velocity [mm/s]
1	1.791	19.876	220.91	12.38	21.97	23.95
2	3.073	18.085	222.43	73.90	81.98	40.87

- Total pressure drop in the feed section: 4.864 MPa

7.5.2.1.2 Distribution Section or Spiral Mandrel

- Pressure drop: The pressure drop from the beginning of the spirals through the rest of the die is the same as at the end of the feed section shown above, which is 15.01 MPa, and at the end of the spirals it is 7.314 MPa, which is the pressure drop through the section after the spirals part of the mandrel. Therefore, the total pressure drop through the spiral section is 7.696 MPa.
- Temperature change: The temperature at the end of the spirals is 224 °C—an increase of 2 °C.

- Shear rate: The maximum shear rate in the channel is 281 s^{-1} and the minimum is 1.001 s^{-1}. The shear rate in the gap over the land has a maximum of 281.47 s^{-1} and a minimum of 2.191 s^{-1}.
- Shear stress: The shear stress at the beginning of the spirals is 109.52 kPa and at the end of the spirals and in the gap over the land it is 96.10 kPa. Any fluctuations in between the start and the end of the spirals can be ignored for practical purposes.
- Flow rate at mandrel exit: The average flow rate at the mandrel exit is 0.235 cm^3/s with a variation of ±3.28 %. The maximum limit of this variation is ±4 % for a good die design.

7.5.2.1.3 Sections Past the Mandrel

The simulation results for the five sections past the spiral mandrel are shown in Table 7.19.

Table 7.19 Simulation Results of Variables in the Sections Past the Mandrel (⌀16 mm, HDPE)

Section #	ΔP [MPa]	q1 [cm^3/s]	q2 [cm^3/s]	T [°C]	Shear rate [s^{-1}]	Shear stress [kPa]
Start #1	7.32	0.0000	0.234	224.22	156.79	96.20
Start #2	6.94	0.0000	0.234	224.28	145.76	94.28
Start #3	6.59	0.0000	0.234	224.57	126.28	90.35
Start #4	4.79	0.0000	0.234	225.13	215.43	101.96
Start #5	2.30	0.0000	0.234	225.80	418.57	114.81

- Melt flow distribution at the die lip: 0.234 cm^3/s
- Variation of melt flow at the die exit: ±0.34 %

From the results above it can be concluded that the die is suitable for making HDPE tubes of up to ⌀16 mm with an output of 40 kg/h, and a melt and die temperature of 220 °C, without making any changes to its geometry.

7.5.2.2 Simulation Results of ⌀4 mm Tube Die

In the section of LDPE, some corrections to the pin and the die were made to adjust the shear stress to an acceptable level. Keeping the changes made for LDPE, the die is simulated for HDPE and an output of 20 kg/h at a melt temperature of 220 °C and a die temperature of 220 °C. All other processing conditions are kept the same as for the ⌀16 mm tube for HDPE. The results generated from the simulation are as follows:

7.5.2.2.1 Feed Section

The simulation results of the variables in the feed section are shown in Table 7.20.

Table 7.20 Simulation Results of Variables in the Feed Section (⌀4 mm, HDPE)

Section #	Δp [MPa]	ΔP [MPa]	T [°C]	Shear rate [s^{-1}]	Shear stress [kPa]	Velocity [mm/s]
1	1.39	16.737	220.70	24.94	48.74	34.98
2	2.40	15.35	221.88	136.28	89.32	59.69

- Total pressure drop through feed section: 3.79 MPa

7.5.2.2.2 Distribution Section or Spiral Mandrel

- Pressure drop: The pressure drop from the beginning of the spirals through the rest of the die is the same as at the end of the feed section shown above, which is 12.95 MPa, and at the end of the spirals it is 6.97 MPa, which is the pressure drop through the section after the spirals part of the mandrel. Therefore, the total pressure drop through the spiral section is 5.98 MPa.
- Temperature change: The temperature at the end of the spirals is 222.38 °C—an increase of 0.50 °C.
- Shear rate: The maximum shear rate in the channel is 127.881 s^{-1} and the minimum is 1.001 s^{-1}. The shear rate in the gap over the land has a maximum of 137.39 s^{-1} and a minimum of 1.00 s^{-1}.
- Shear stress: The shear stress at the beginning of the spirals is 92.32 kPa and at the end of the spirals and in the gap over the land it is 98.91 kPa. Any fluctuations in between the start and the end of the spirals can be ignored for practical purposes.
- Flow rate at mandrel exit: The average flow rate at the mandrel exit is 0.117 cm^3/s with a variation of ±3.20%. The maximum limit of this variation is ±4% for a good die design.

7.5.2.2.3 Sections Past the Mandrel

The simulation results for the five sections past the spiral mandrel are shown in Table 7.21.

Table 7.21 Simulation Results of Variables in the Sections Past the Mandrel (⌀4 mm, HDPE)

Section #	ΔP [MPa]	q1 [cm^3/s]	q2 [cm^3/s]	T [°C]	Shear rate [s^{-1}]	Shear stress [kPa]
Start #1	6.31	0.0000	0.116	222.92	75.57	79.99
Start #2	6.31	0.0000	0.117	222.95	70.38	78.21
Start #3	6.03	0.0000	0.117	223.05	60.84	74.54
Start #4	4.54	0.0000	0.117	223.66	132.88	93.01
Start #5	1.467	0.0000	0.117	224.18	469.20	121.29

- Melt flow distribution at the die lip: 0.117 cm^3/s
- Variation of melt flow at the die exit: ± 0.34 %
- Total pressure drop through the die: 16.34 MPa

The conclusion of the simulation results for the ⌀4 mm tube die using HDPE is that the die would work well using the set of tooling (pin and die) as corrected for LDPE. The output for ⌀4 mm HDPE tubes is better than the two previous materials (i. e., TPU and LDPE). As the pressure drop and shear stresses in the die are very moderate, the die would be suitable with many other grades of HDPE over the large range of sizes mentioned above.

7.5.3 Nylon 12

Nylon (PA12) is used for manufacturing tubes, because of its easy processing and mechanical loading. Nylon (PA12) tubes are used in many applications, especially involving petro-chemicals, greases, oils, and salt solutions, and are widely used in industry for flexible air hoses, fuel oil, and pneumatic applications.

To check the performance of the die using Nylon (PA12), material data is selected from CAMPUS®, available on the internet. The PA12 grade selected is Grilamid L25 W40 from the manufacturer EMS-CHEMIE AG. Most of the rheological and thermodynamic properties of this grade of PA12 are also available on the internet. In the above die simulation, the processing conditions are changed for the selected grade of PA12, keeping the die geometry the same as in the case of LDPE for both sizes of the tubes (i. e., ⌀16 mm and ⌀4 mm). The following processing conditions were used:

Processing Conditions

- Material: PA12, grade Grilamid L25x W 40 by EMS-CHEMIE AG.
- Melt temperature: 200 °C.
- Die temperature: 200 °C.

- Output: 30 kg/h for ⌀16 mm tubes and 12 kg/h for ⌀4.00 mm were tried.
- Draw down ratio and draw down ratio balance: The same DDR as specified in Table 7.2 was used for ⌀16 mm tubes, and the DDR and DRB used in the case of LDPE for ⌀4.00 mm tubes were tried; adjustments, if necessary, would be made.

7.5.3.1 Simulation Results of ⌀16 mm Tube Die

By using the geometry and processing conditions described, the following results from the simulation were noted in all three sections of the die:

7.5.3.1.1 Feed Section

The simulation results of the variables in the feed section are shown in Table 7.22.

Table 7.22 Simulation Results of Variables in the Feed Section (⌀16 mm, Nylon 12)

Section #	Δp [MPa]	ΔP [MPa]	T [°C]	Shear rate [s^{-1}]	Shear stress [kPa]	Velocity [mm/s]
1	1.3380	19.407	200.65	29.212	46.91	50.545
2	3.202	18.069	202.18	173.80	119.35	86.263

- Total pressure drop in the feed section: 4.54 MPa

7.5.3.1.2 Distribution Section or Spiral Mandrel

- Pressure drop: The pressure drop from the beginning of the spirals through the rest of the die is the same as at the end of the feed section shown above, which is 14.867 MPa, and at the end of the spirals it is 7.98 MPa, which is the pressure drop through the section after the spirals part of the mandrel. Therefore, the total pressure drop through the spiral section is 6.88 MPa.
- Temperature change: The temperature at the end of the spirals is 203.32 °C—an increase of 3.32 °C.
- Shear rate: The maximum shear rate in the channel is 158.36 s^{-1} and the minimum is 1.001 s^{-1}. The shear rate in the gap over the land has a maximum of 148.86 s^{-1} and a minimum of 2.721 s^{-1}.
- Shear stress: The shear stress at the beginning of the spirals is 103.55 kPa and at the end of the spirals and in the gap over the land it is 86.69 kPa. Any fluctuations in between the start and the end of the spirals can be ignored for practical purposes.
- Flow rate at mandrel exit: The average flow rate at the mandrel exit is 0.169 cm^3/s with a variation of ±2.02%. The maximum limit of this variation is ±4% for a good die design.

7.5.3.1.3 Sections Past the Mandrel

The simulation results for the five sections past the spiral mandrel are shown in Table 7.23.

Table 7.23 Simulation Results of Variables in the Sections Past the Mandrel (⌀16 mm, Nylon 12)

Section #	ΔP [MPa]	q1 [cm^3/s]	q2 [cm^3/s]	T [°C]	Shear rate [s^{-1}]	Shear stress [kPa]
Start #1	7.625	0.0000	0.169	203.34	93.61	90.00
Start #2	7.267	0.0000	0.169	203.36	86.63	86.37
Start #3	6.95	0.0000	0.169	203.44	74.44	79.89
Start #4	5.36	0.0000	0.169	203.88	125.14	104.03
Start #5	2.81	0.0000	0.169	204.65	238.33	140.76

- Melt flow distribution at the die lip: 0.169 cm^3/s
- Variation of melt flow at the die exit: ± 0.02 %
- Total pressure drop through the die: 19.407 MPa

From the results above it can be concluded that the die is suitable for making Nylon 12 tubes of up to ⌀16 mm with an output of 30 kg/h, and a melt and die temperature of 200 °C, without making any changes to its geometry. Very small excessive shear stress at the dip will not make any difference and if there is any doubt it can be overcome by adjusting the temperature at the die tip.

7.5.3.2 Simulation Results of ⌀4 mm Tube Die

⌀4 mm tubes made of Nylon 12 using the same set of tooling (pin and die) as in the case of LDPE give reasonable results. The die is simulated for Nylon 12 and an output of 13.50 kg/h at a melt temperature of 200 °C and a die temperature of 200 °C. All other processing conditions are kept the same as for the ⌀16 mm tube for Nylon 12. The results generated from the simulation are as follows:

7.5.3.2.1 Feed Section

The simulation results of the variables in the feed section are shown in Table 7.24.

Table 7.24 Simulation Results of Variables in the Feed Section (⌀4 mm, Nylon 12)

Section #	Δp [MPa]	ΔP [MPa]	T [°C]	Shear rate [s^{-1}]	Shear stress [kPa]	Velocity [mm/s]
1	0.80	13.28	200.39	12.74	28.11	22.75
2	2.12	12.48	201.39	74.82	79.01	38.82

- Total pressure drop through feed section: 2.92 MPa

7.5.3.2.2 Distribution Section or Spiral Mandrel

- Pressure drop: The pressure drop from the beginning of the spirals through the rest of the die is the same as at the end of the feed section shown above, which is 10.36 MPa, and at the end of the spirals it is 5.91 MPa, which is the pressure drop through the section after the spirals part of the mandrel. Therefore, the total pressure drop through the spiral section is 4.45 MPa.
- Temperature change: The temperature at the end of the spirals is 201.70 °C—an increase of 0.31 °C.
- Shear rate: The maximum shear rate in the channel is 70.60 s^{-1} and the minimum is 1.00 s^{-1}. The shear rate in the gap over the land has a maximum of 64.64 s^{-1} and a minimum of 1.08 s^{-1}.
- Shear stress: The shear stress at the beginning of the spirals is 74.00 kPa and at the end of the spirals and in the gap over the land it is 55.50 kPa. Any fluctuations in between the start and the end of the spirals can be ignored for practical purposes.
- Flow rate at mandrel exit: The average flow rate at the mandrel exit is 0.076 cm^3/s with a variation of ±1.86%. The maximum limit of this variation is ±4% for a good die design.

7.5.3.2.3 Sections Past the Mandrel

The simulation results for the five sections past the spiral mandrel are shown in Table 7.25.

Table 7.25 Simulation Results of Variables in the Sections Past the Mandrel (Ø4 mm, Nylon 12)

Section #	ΔP [MPa]	q1 [cm^3/s]	q2 [cm^3/s]	T [°C]	Shear rate [s^{-1}]	Shear stress [kPa]
Start #1	5.68	0.0000	0.076	201.68	40.04	57.35
Start #2	5.45	0.0000	0.076	201.66	38.09	54.98
Start #3	5.25	0.0000	0.076	201.60	32.95	50.57
Start #4	4.24	0.0000	0.076	202.00	70.61	77.17
Start #5	1.69	0.0000	0.076	202.61	241.49	139.70

- Melt flow distribution at the die lip: 0.076 cm^3/s
- Variation of melt flow at the die exit: ±0.04%
- Total pressure drop through the die: 13.28 MPa

The conclusion of the simulation results for the Ø4 mm tube die using Nylon 12 is that the die would work well using the set of tooling (pin and die) as corrected for LDPE. The output for Ø4 mm Nylon 12 tubes is similar to TPU and LDPE. As the pressure drop and shear stresses in the die are very moderate, the die would be

suitable with many other grades of Nylon 12 over the large range of sizes mentioned above.

7.5.4 Flexible PVC

Every customer wishes to have a tube and pipe die that can be used on multiple materials and a large range of sizes, but it is not always possible to design and make such a die. Standard spiral mandrel tube and pipe dies made for other polymers sometimes do not work with a grade of flexible PVC. If a specific grade of flexible PVC of known rheological and thermodynamic properties is specified, then the die can be designed to run with as many other polymers. In this case the die is designed specifically for TPU, which is the preferred material, but the endeavor is to make it work with other polymers likely to be used. Therefore, it has been found that this die would not work without major modifications with flexible PVC and that if all the modifications are carried out to make it work for flexible PVC of a specific grade, then it may not be suitable for the other polymers tried above.

The reason for this is that, with flexible PVC, there is no such thing as standard flexible PVC. Normally flexible PVC is compounded to suit a specific product by the compounders and, as a result, the amount and type of fillers, plasticizers, and stabilizers vary from one composition to another. To prove this point, a number of grades of flexible PVC, for which the rheology data and the thermodynamic properties have been collected over a period of time (for different customers' applications), are tried. Instead of giving details of all three sections of the die for every material, only the problematic sections are highlighted with comments. For the most suitable grade that would work with the above die, the analysis of the results is detailed.

7.5.4.1 Simulation Results of ⌀16 mm Tube Die

Using the same die geometry as before, the die is tested with a number of different grades of flexible PVC.

7.5.4.1.1 Typical Flexible PVC (Power Law)

The first example is typical flexible PVC (power law); the data for this material is taken from the software. The processing conditions of an output of 30 kg/h, a melt temperature of 175 °C, and a die temperature of 170 °C are chosen with the die geometry for ⌀16 mm tubes as defined above. The initial results for the feed section are listed in Table 7.26.

Table 7.26 Simulation Results of Variables in the Feed Section (Ø16 mm, Typical Flexible PVC (Power Law))

Section #	Δp [MPa]	ΔP [MPa]	T [°C]	Shear rate [s^{-1}]	Shear stress [kPa]	Velocity [mm/s]
1	6.356	81.53	177.02	22.10	222.83	39.44
2	16.647	75.18	183.32	120.72	620.63	67.30

- Pressure drop in feed section: 23.00 MPa

The results in Table 7.26 show that there is 4 times the normal pressure drop through the die, and a high rise in temperature due to extremely high shear stress. There is no way that the present die geometry can be modified to work with this material without completely redrawing the die and then it may not be suitable for the other materials specified above. Therefore, without going any further, it can be concluded that this material is not suitable for this die.

7.5.4.1.2 Typical Flexible PVC (Power Law) – Slip

The second material taken from the software, for which the data is from literature, is tried with the above processing conditions and die geometry. The results of the flow through the feed section are shown in Table 7.27.

Table 7.27 Simulation Results of Variables in the Feed Section (Ø16 mm, Typical Flexible PVC (Power Law) – Slip)

Section #	Δp [MPa]	ΔP [MPa]	T [°C]	Shear rate [s^{-1}]	Shear stress [kPa]	Velocity [mm/s]
1	3.955	74.13	176.07	85.95	138.66	39.09
2	0.0000	70.179	175.81	0.0000	0.0000	0.0000

- Pressure drop in feed section: 3.955 MPa

From the results in Table 7.27, the first part of the feed section showed better results than the previous material. On closer look, at the second part of the feed section and subsequent sections (not shown here), it is clear that the material is not moving beyond the first part of the feed section. High pressure means the system is overloaded and the die is unstable. Therefore, without going any further, it is concluded that this material is not suitable to run on this die.

7.5.4.1.3 Hydro Polymers' Own Grade

This grade of flexible PVC was recommended by the material manufacturer to a particular customer for medical tubes. The properties data was supplied by Hydro Polymers and used here to test the die, and the results in the feed section are shown in Table 7.28.

Table 7.28 Simulation Results of Variables in the Feed Section (⌀16 mm, Flexible PVC – Hydro Polymers' Own Grade)

Section #	Δp [MPa]	ΔP [MPa]	T [°C]	Shear rate [s^{-1}]	Shear stress [kPa]	Velocity [mm/s]
1	4.629	42.25	176.93	39.118	162.23	37.00
2	5.711	37.62	179.63	214.43	212.86	63.157

- Pressure drop in feed section: 10.340 MPa

This material is also showing a very high pressure drop through the die of 42.25 MPa, which would overload the system and make the die unstable. The very high shear stress in the two parts of the feed section would also destroy the material. Therefore, it can be concluded that this material is also not suitable for this die.

7.5.4.1.4 Hydro Polymers XH76214

Another grade of flexible PVC from Hydro Polymers, which was recommended to a customer for medical tubes, was tried here with the same die and same processing conditions. The results noted are shown in Table 7.29.

Table 7.29 Simulation Results of Variables in the Feed Section (⌀16 mm, Flexible PVC – Hydro Polymers XH76214)

Section #	Δp [MPa]	ΔP [MPa]	T [°C]	Shear rate [s^{-1}]	Shear stress [kPa]	Velocity [mm/s]
1	10.668	136.68	181.49	24.96	374.06	40.24
2	22.35	126.01	194.08	136.90	833.46	68.68

- Pressure drop in feed section: 33.02 MPa

It is clear from the results in Table 7.29 that even this grade of flexible PVC is not suitable to run on this die.

7.5.4.1.5 Rehau 8426

Another grade of flexible PVC from Rehau PVC, which was used by a customer for the manufacture of tubes and hoses for industrial application, was tried. The rheology data was obtained from a laboratory and standard thermodynamic properties were used with the above die geometry. A 175 °C melt temperature and a 170 °C die temperature gave the results shown in Table 7.30.

Table 7.30 Simulation Results of Variables in the Feed Section (Ø16 mm, Flexible PVC – Rehau 8426)

Section #	△p [MPa]	△P [MPa]	T [°C]	Shear rate [s^{-1}]	Shear stress [kPa]	Velocity [mm/s]
1	1.15	16.59	175.12	24.087	40.42	37.00
2	2.31	15.43	176.17	131.57	86.25	63.16

- Pressure drop in feed section: 3.47 MPa

The results in Table 7.30 are all well within the acceptable levels; therefore, the die was further analyzed to complete the flow characteristics. As the pressure drop and shear stress are well within the limits, the maximum achievable output was tried. It was seen that an output of 45 kg/h is achievable with satisfactory results, which are listed below for all three sections:

Processing Conditions

- Material: Rehau 8426 flexible PVC.
- Melt temperature: 175 °C.
- Die temperature: 170 °C.
- Output: 45 kg/h for Ø16 mm tubes and 15 kg/h for Ø4.00 mm were tried.
- Draw down ratio and draw down ratio balance: The same DDR as specified in Table 7.2 was used for Ø16 mm tubes, and the DDR and DRB used in the case of LDPE for Ø4.00 mm tubes were tried; adjustments, if necessary, would be made.

7.5.4.2 Simulation Results of Ø16 mm Tube Die

By using the above geometry and processing conditions, the following results from the simulation were noted in all three sections of the die:

7.5.4.2.1 Feed Section

The simulation results of the variables in the feed section are shown in Table 7.31.

Table 7.31 Simulation Results of Variables in the Feed Section (Ø16 mm, Flexible PVC - Rehau 8426)

Section #	△p [MPa]	△P [MPa]	T [°C]	Shear rate [s^{-1}]	Shear stress [kPa]	Velocity [mm/s]
1	1.38	18.79	175.37	36.13	48.48	55.51
2	2.75	17.41	176.72	197.35	102.62	94.74

- Total pressure drop in the feed section: 4.14 MPa

7.5.4.2.2 Distribution Section or Spiral Mandrel

- Pressure drop: The pressure drop from the beginning of the spirals through the rest of the die is the same as at the end of the feed section shown above, which is (18.79 MPa–4.14 MPa) 14.65 MPa, and at the end of the spirals it is 7.68 MPa, which is the pressure drop through the section after the spirals part of the mandrel. Therefore, the total pressure drop through the spiral section is 6.97 MPa.
- Temperature change: The temperature at the end of the spirals is 176.48 °C—a slight drop of 0.26 °C.
- Shear rate: The maximum shear rate in the channel is 197.89 s^{-1} and the minimum is 1.00 s^{-1}. The shear rate in the gap over the land has a maximum of 192.24 s^{-1} and a minimum of 1.55 s^{-1}.
- Shear stress: The shear stress at the beginning of the spirals is 103.27 kPa and at the end of the spirals and in the gap over the land it is 86.08 kPa. Any fluctuations in between the start and the end of the spirals can be ignored for practical purposes.
- Flow rate at mandrel exit: The average flow rate at the mandrel exit is 0.186 cm^3/s with a variation of ±2.76%. The maximum limit of this variation is ±4% for a good die design.

7.5.4.2.3 Sections Past the Mandrel

The simulation results for the five sections past the spiral mandrel are shown in Table 7.32.

Table 7.32 Simulation Results of Variables in the Sections Past the Mandrel (⌀16 mm, Flexible PVC – Rehau 8426)

Section #	ΔP [MPa]	q1 [cm^3/s]	q2 [cm^3/s]	T [°C]	Shear rate [s^{-1}]	Shear stress [kPa]
Start #1	7.01	0.0000	0.185	177.10	116.60	92.60
Start #2	6.93	0.0000	0.185	117.11	108.41	90.27
Start #3	6.60	0.0000	0.186	117.10	93.81	85.76
Start #4	4.88	0.0000	0.186	117.47	158.97	101.42
Start #5	2.41	0.0000	0.186	178.11	306.71	120.35

- Melt flow distribution at the die lip: 0.186 cm^3/s
- Variation of melt flow at the die exit: ±0.29%
- Total pressure drop through the die: 18.79 MPa

From the results above it can be concluded that the die is suitable for making PVC tubes of up to ⌀16 mm with an output of 45 kg/h only using a particular grade of flexible PVC, at the melt temperature of 175 °C and die temperature of 170 °C, without making any changes to its geometry.

7.5.4.3 Simulation Results of ⌀4 mm Tube Die

⌀4 mm tubes made from the above grade of PVC, using the same set of tooling (pin and die) as was originally designed prior to correction, were tried. In other words, the die geometry is as shown in Table 7.2 and Figure 7.7. This combination of die geometry and material data give reasonable results. The die is simulated for flexible PVC (Rehau 8426) and an output of 15.00 kg/h at a melt temperature of 175 °C and a die temperature of 170 °C. All other processing conditions are kept the same as for the ⌀16 mm tube for Flexible PVC above. The results generated from the simulation are as follows:

7.5.4.3.1 Feed Section

The simulation results of the variables in the feed section are shown in Table 7.33.

Table 7.33 Simulation Results of Variables in the Feed Section (⌀4 mm, Flexible PVC – Rehau 8426)

Section #	△p [MPa]	△P [MPa]	T [°C]	Shear rate [s^{-1}]	Shear stress [kPa]	Velocity [mm/s]
1	0.85	15.83	174.63	12.04	29.61	18.50
2	1.72	14.99	175.26	65.78	64.18	31.58

- Total pressure drop through feed section: 2.57 MPa

7.5.4.3.2 Distribution Section or Spiral Mandrel

- Pressure drop: The pressure drop from the beginning of the spirals through the rest of the die is the same as at the end of the feed section shown above, which is 13.27 MPa, and at the end of the spirals it is 8.57 MPa, which is the pressure drop through the section after the spirals part of the mandrel. Therefore, the total pressure drop through the spiral section is 4.70 MPa.
- Temperature: The temperature at the end of the spirals is 175.00 °C.
- Shear rate: The maximum shear rate in the channel is 64.23 s^{-1} and the minimum is 1.00 s^{-1}. The shear rate in the gap over the land has a maximum of 59.98 s^{-1} and a minimum of 1.00 s^{-1}.
- Shear stress: The shear stress at the beginning of the spirals is 75.19 kPa and at the end of the spirals and in the gap over the land it is 65.90 kPa. Any fluctuations in between the start and the end of the spirals can be ignored for practical purposes.
- Flow rate at mandrel exit: The average flow rate at the mandrel exit is 0.062 cm^3/s with a variation of ±2.34%. The maximum limit of this variation is ±4% for a good die design.

7.5.4.3.3 Sections Past the Mandrel

The simulation results for the five sections past the spiral mandrel are shown in Table 7.34.

Table 7.34 Simulation Results of Variables in the Sections Past the Mandrel (⌀4 mm, Flexible PVC – Rehau 8426)

Section #	ΔP [MPa]	q1 [cm^3/s]	q2 [cm^3/s]	T [°C]	Shear rate [s^{-1}]	Shear stress [kPa]
Start #1	8.31	0.0000	0.062	173.82	36.73	63.89
Start #2	8.05	0.0000	0.062	173.76	34.14	61.90
Start #3	7.83	0.0000	0.062	173.44	29.47	58.19
Start #4	6.66	0.0000	0.062	173.94	91.95	93.39
Start #5	3.06	0.0000	0.062	175.20	677.18	**168.60**

- Melt flow distribution at the die lip: 0.062 cm^3/s
- Variation of melt flow at the die exit: ± 0.50 %
- Total pressure drop through the die: 15.83 MPa

The conclusion of the simulation results for the ⌀4 mm tube die using flexible PVC (Rehau 8426) is that the die would work well using the original set of tooling (pin and die). The shear stress in the land section of the tooling is higher than normal, which can be corrected by raising the temperature at the die tip to 180 °C. This results in reducing the shear stress in the land area to 135 kPa. The output for ⌀4 mm PVC tubes is 15 kg/h, which is slightly higher than some other materials used for this exercise.

It can also be concluded from the results above that not all grades of flexible PVC are suitable with all the dies and sometimes it is essential to design and make different dies for flexible PVC than the ones for other materials. In many cases the reverse of this is true: the dies made for certain grades of flexible PVC work satisfactorily with other polymers.

8 Monolayer Die for Pipes ∅50 mm to ∅125 mm

The design of monolayer pipe and tube dies up to ∅50 mm has been explained in the previous chapters. Chapter 5 covered step by step design procedures for pipe and tube dies. The examples given in that chapter demonstrated the design procedures of ∅20 mm to ∅50 mm pipe and tube dies in detail. Chapter 6 showed the design of a special die for small diameter tubes of ∅2 mm to ∅6 mm tubes. The principles of designing the die given in that chapter can be adapted for other sizes and applications, with small modifications. Chapter 7 has been devoted to the design of die for tubes for multiple usages in four different materials—namely, low density polyethylene, high density polyethylene, Nylon 12, and flexible PVC—for many sizes, from ∅4 mm to ∅16 mm tubes. This chapter covers the design of pipes of ∅50 mm to ∅125 mm. The die is specifically designed for gas and water pipes in HDPE, but can be adapted for other materials and other uses. The number of steps involved in the design strategy of any die is the same as described in Chapter 7 and they are repeated again and again with different information and data.

8.1 Design Brief

The information regarding product, materials, processing conditions, equipment, etc. is collected and shown in Table 8.1.

Table 8.1 Design Brief

1.	Product	∅50 mm to ∅125 mm pipes for water and gas applications.
2.	Product range	See Table 8.2 giving outside and inside diameters of the pipes.
3.	Wall thickness of each product	Wall thicknesses are obtained from most commonly used standards for water and gas pipes, according to BS EN 12201-Part 2 and BS EN 1555-Part 2 respectively, as shown in Table 8.2.
4.	Materials used	Specified material HDPE, PE100; specified PE80 can be used in some cases.

Table 8.1 Design Brief *(continued)*

5.	Rheology data	Supplied by the manufacturers of HDPE.
6.	Thermodynamic properties	Thermodynamic properties for the above grade are supplied by the material manufacturer.
7.	Extruder	⌀45 mm barrier screw extruder capable of plasticizing 300 kg/h of HDPE.
8.	Calibrator	The calibrators were supplied by the manufacturers of the equipment and no information is available.
9.	Cooling bath	Adequate vacuum bath and spray cooling facility from the customer.
10.	Haul-off	Not applicable for die design
11.	Cutter	Not applicable for die design
12.	Winder	Not applicable for die design

Table 8.2 shows the pipe dimensions for commonly used sizes of pipes for water and gas as described in the BS EN 12201-Part 2 and BS EN 1555-Part 2 standards.

Table 8.2 Pipe Dimensions for Commonly Used Sizes of Pipes for Water and Gas–BS EN 12201-Part 2 and BS EN 1555-Part 2 Standards

	Pipe series											
	SDR 6 S 2.5		SDR 7.4 S 3.2		SDR 9 S 4		SDR 11 S 5		SDR 13.6 S 6.3		SDR 17 S 8	
	Nominal pressure, PN[a] in bar											
PE 40	–		PN 10		PN 8		–		PN 5		PN 4	
PE 80	PN 25		PN 20		PN 16		PN 12.5		PN 10		PN 8	
PE 100	–		PN 25		PN 20		PN 16		PN 12.5		PN 10	
Nom. size DN/OD	Wall thicknesses[b] in millimeters											
	e_{min}	e_{max}	e_{min}	e_{max}	e_{min}	e_{max}	e_{min}	e_{max}	e_{min}	e_{max}	e_{min}	e_{max}
16	3.0[c]	3.4	2.3[c]	2.7	2.0[c]	2.3	–	–	–	–	–	–
20	3.4	3.9	3.0[c]	3.4	2.3	2.7	2.0[c]	2.3	–	–	–	–
25	4.2	4.8	3.5	4.0	3.0[c]	3.4	2.3	2.7	2.0[c]	2.3	–	–
32	5.4	6.1	4.4	5.0	3.6	4.1	3.0[c]	3.4	2.4	2.8	2.0[c]	2.3
40	6.7	7.5	5.5	6.2	4.5	5.1	3.7	4.2	3.0	3.5	2.4	2.8
50	8.3	9.3	6.9	7.7	5.6	6.3	4.6	5.2	3.7	4.2	3.0	3.4
63	10.5	11.7	8.6	9.6	7.1	8.0	5.8	6.5	4.7	5.3	3.8	4.3
75	12.5	13.9	10.3	11.5	8.4	9.4	6.8	7.6	5.6	6.3	4.5	5.1
90	15.0	16.7	12.3	13.7	10.1	11.3	8.2	9.2	6.7	7.5	5.4	6.1
110	18.3	20.3	15.1	16.8	12.3	13.7	10.0	11.1	8.1	9.1	6.6	7.4
125	20.8	23.0	17.1	19.0	14.0	15.6	11.4	12.7	9.2	10.3	7.4	8.3
140	23.3	25.8	19.2	21.3	15.7	17.4	12.7	14.1	10.3	11.5	8.3	9.3
160	26.6	29.4	21.9	24.2	17.9	19.8	14.6	16.2	11.8	13.1	9.5	10.6
180	29.9	33.0	24.6	27.2	20.1	22.3	16.4	18.2	13.3	14.8	10.7	11.9

200	33.2	36.7	27.4	30.3	22.4	24.8	18.2	20.2	14.7	16.3	11.9	13.2
225	37.4	41.3	30.8	34.0	25.2	27.9	20.5	22.7	16.6	18.4	13.4	14.9
250	41.5	45.8	34.2	37.8	27.9	30.8	22.7	25.1	18.4	20.4	14.8	16.4
280	46.5	51.3	38.3	42.3	31.3	34.6	25.4	28.1	20.6	22.8	16.6	18.4
315	52.3	57.7	43.1	47.6	35.2	38.9	28.6	31.6	23.2	25.7	18.7	20.7
355	59.0	65.0	48.5	53.5	39.7	43.8	32.2	35.6	26.1	28.9	21.1	23.4
400	–	–	54.7	60.3	44.7	49.3	36.3	40.1	29.4	32.5	23.7	26.2
450	–	–	61.5	67.8	50.3	55.5	40.9	45.1	33.1	36.6	26.7	29.5
500	–	–	–	–	55.8	61.5	45.4	50.1	36.8	40.6	29.7	32.8
560	–	–	–	–	62.5	68.9	50.8	56.0	41.2	45.5	33.2	36.7
630	–	–	–	–	70.3	77.5	57.2	63.1	46.3	51.1	37.4	41.3
710	–	–	–	–	79.3	87.4	64.5	71.1	52.2	57.6	42.1	46.5
800	–	–	–	–	89.3	98.4	72.6	80.0	58.8	64.8	47.4	52.3
900	–	–	–	–	–	–	81.7	90.0	66.1	72.9	53.3	58.8
1000	–	–	–	–	–	–	90.8	100.0	73.5	80.9	59.3	65.4
1200	–	–	–	–	–	–	–	–	88.2	97.2	71.1	78.4
1400	–	–	–	–	–	–	–	–	102.8	113.3	83.0	91.5
1600	–	–	–	–	–	–	–	–	117.5	129.4	94.8	104.4
1800	–	–	–	–	–	–	–	–	–	–	106.6	117.4
2000	–	–	–	–	–	–	–	–	–	–	118.5	130.4

[a] PN values are based on C = 1.25.
[b] Tolerances in accordance with grade V of ISO 11922-1:1997.
[c] The calculated value of $e_{min.}$ (ISO 4065:1996) is rounded up to the nearest value of either 2.0, 2.3, or 3.0. This is to satisfy certain national requirements.

8.2 Calculations of Draw Down Ratios for Tool Sizes

In the previous chapters, the calculations for draw down ratios have been based on the sizes of the pipes and tubes specified by the customers. The manufacturers of PE pipes for water and gas applications use pressure rating of the pipes based on SDR (Standard Dimension Ratio). SDR is the diameter to thickness ratio and can be expressed as:

$$SDR = D / S \tag{8.1}$$

where

- D = outside diameter of pipe [mm]
- S = pipe wall thickness [mm]

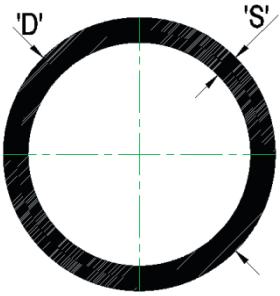

Figure 8.1 SDR: pipe diameter D and wall thickness S

For example, SDR 11 means that the outside diameter (D) of the pipe is eleven times the thickness (S) of the pipe. Therefore, the higher the SDR ratio, the lower is the wall thickness of the pipe of the same outside diameter and vice versa, as is shown in Table 8.2. For the water and gas pipes two commonly used SDR are 11 and 17.

Table 8.3 shows the most used pipe sizes for water and gas, based on 11 and 17 SDR and the sizes of the inside diameter of the die and the outside diameter of mandrel (pin). These tooling sizes are used as a guide for design purposes. The final sizes are sometimes adjusted to suit the processing conditions and other downstream equipment like the calibrator and the haul-off.

Table 8.3 Draw Down Ratios and Tooling Sizes

Pipe spec.	Pipe OD [mm]	Pipe ID [mm]	Wall thickness [mm]	Die ID [mm]	Pin OD [mm]	DDR	Layer thickness at die exit [mm]
SDR 11							
50	50.00	40.91	4.55	60.00	49.09	1.44	5.45
63	63.00	51.55	5.73	75.60	61.85	1.44	6.87
75	75.00	61.36	6.82	90.00	73.64	1.44	8.18
90	90.00	73.64	8.18	108.00	88.36	1.44	9.82
110	110.00	90.00	10.00	132.00	108.00	1.44	12.00
125	125.00	102.27	11.36	150.00	122.73	1.44	13.64
125	125.00	102.27	11.36	137.50	112.50	1.21	12.50
SDR 17							
50	50.00	44.12	2.94	70.00	61.76	1.96	4.12
63	63.00	55.58	3.71	88.20	77.82	1.96	5.19
75	75.00	66.18	4.41	97.50	86.03	1.69	5.74
90	90.00	79.41	5.29	117.00	103.24	1.69	6.88
110	110.00	97.06	6.47	143.00	126.18	1.69	8.41
125	125.00	110.29	7.36	162.60	143.38	1.69	9.56

8.3 Initial Die Design

From the sizes of the die ID and the pin OD taken from Table 8.3, initially the die is designed for the largest diameter of pipes—size ⌀125 mm OD and 17 SDR, where the die inside diameter is 162.60 mm and the pin outside diameter is 143.38 mm, as shown in Figure 8.2. Then the tooling sizes for ⌀125×11 SDR, ⌀50 mm×17 SDR, and ⌀50 mm×11 SDR are substituted, as shown in Figure 8.3, Figure 8.4, and Figure 8.5, to ensure that the design looks right. In the next stage, as described in the previous chapters, the dies of these 4 sizes are simulated using the die geometry, material data, and appropriate processing conditions. As the product range in this case is large, the dies for other sizes are also simulated to ensure the overall performance of the die. Where necessary, the tooling geometry or output is fine-tuned to optimize processing. The drawings of the 4 sizes of the tooling are shown in Figure 8.2–Figure 8.5.

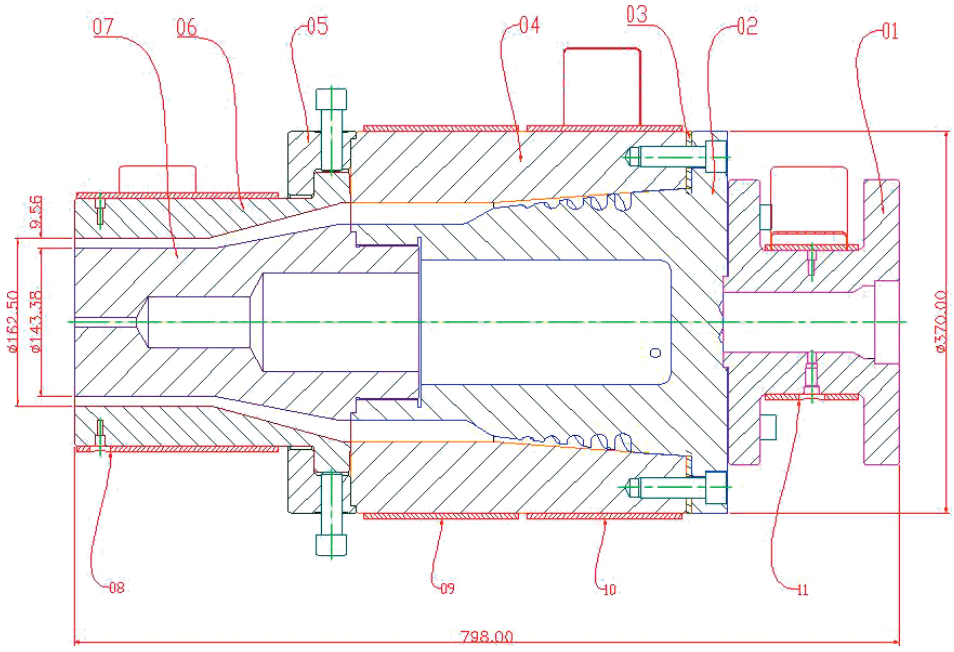

Figure 8.2 G. A. (general arrangement) of ⌀125 mm 17 SDR die

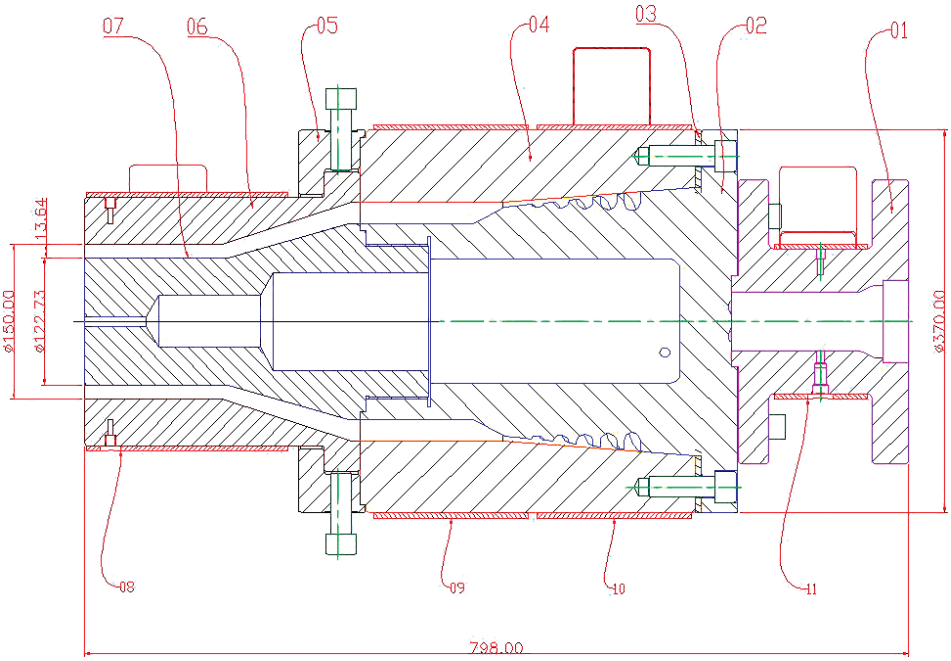

Figure 8.3 G. A. of Ø125 mm 11 SDR die

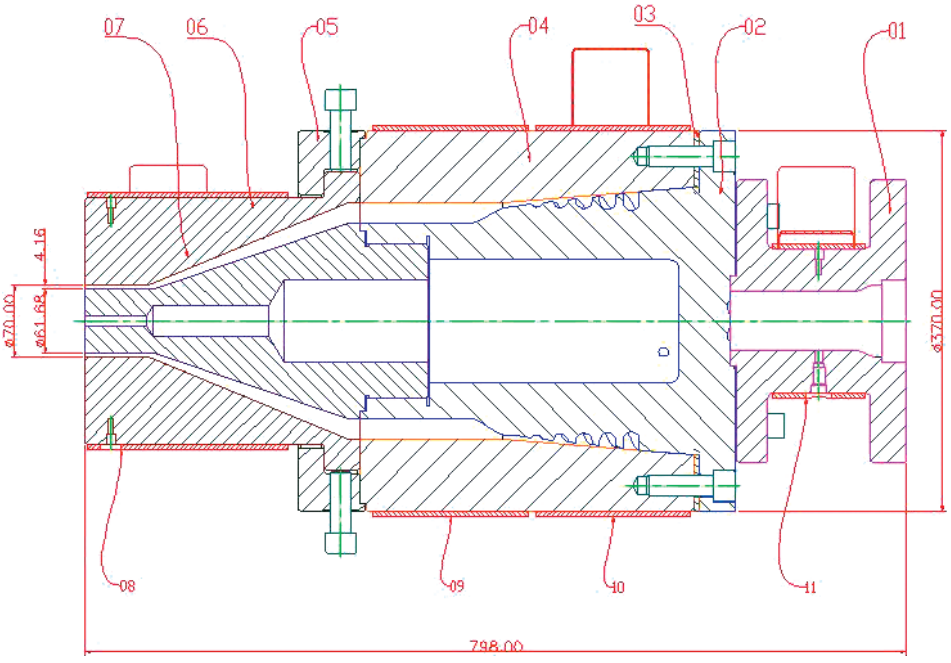

Figure 8.4 G. A. of Ø50 mm 17 SDR die

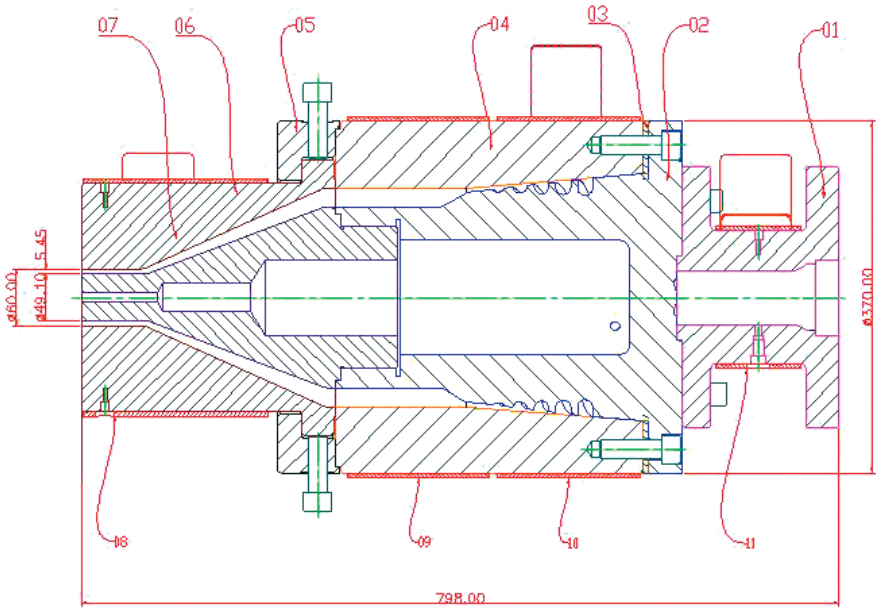

Figure 8.5 G. A. of Ø50 mm 11 SDR die

The names of the parts in the above dies as referred in the text are shown in Table 8.4.

Table 8.4 Part Names

Part no.	Name of the part
1.	Flange adapter
2.	Spiral mandrel
3.	Mandrel spacer
4.	Die body
5.	Die clamp ring
6.	Die (die bush)
7.	Pin (mandrel)
8.	Die heater
9.	Body front heater
10.	Body rear heater
11.	Flange heater

The die geometry in the above 4 drawings (Figure 8.2–Figure 8.5) is divided into three sections, as described previously, for simulation purposes. The three sections are the (a) feed section, (b) distribution section, and (c) section above the distribution section. The geometry of the first 2 sections and part of the third section is

common to all dies within the size range and the tooling section changes with the size of the product.

8.4 Die Geometry

The geometry and necessary dimensions of each section used for the simulation of the die are as follows.

8.4.1 Feed Section

The feed section, as highlighted below in Figure 8.6, is divided into three parts. The first part is the feed from the flange adapter and is a straight section of ⌀57.00 mm × 171.00 mm long. This section is further divided into 6 branches, which feed the 6 start spirals. These branches are ⌀16 mm at the top, to match the width of the spirals, and opened at the bottom to ⌀20 mm to reduce the pressure lost in the branches. Table 8.5 shows the dimensions of the feed section.

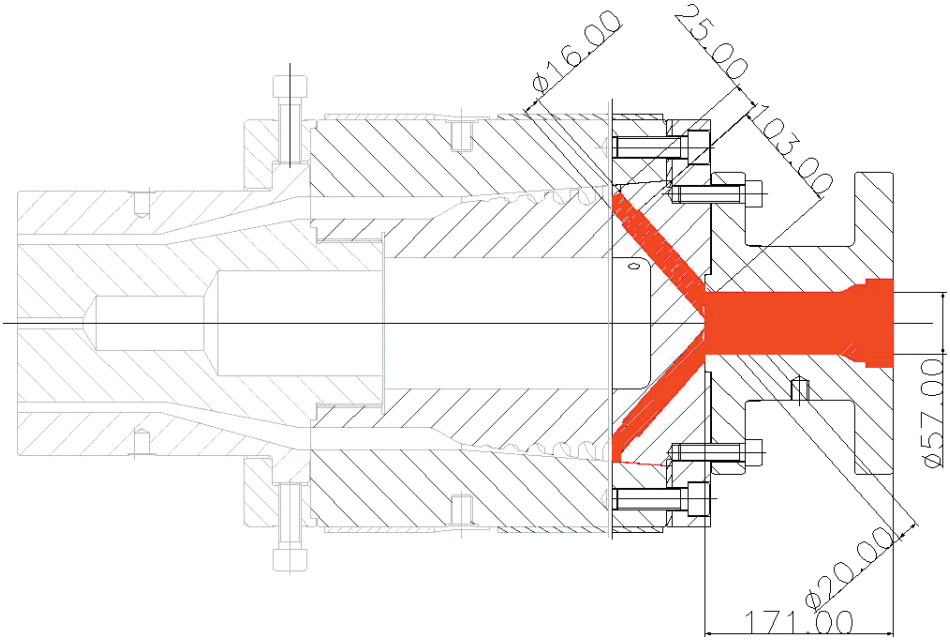

Figure 8.6 Dimensions of feed section of ⌀50–125 mm die

Table 8.5 Dimensions of the Die Feed Section as Inserted into the Software

Splits	L [mm]	Section #	L/D ratio	D [mm]	S [mm^2]
1	171.00	1.	3.00	57.00	2551.76
6	103.00	2.	5.15	20.00	314.16
6	25.00	3.	1.56	16.00	201.06

8.4.2 Distribution or Spiral Mandrel Section

The geometry of this section is made up of the geometry of the die body, the spiral mandrel, and the spirals. The geometry of this section is detailed in Figure 8.7 and the dimensions of the spiral part are shown in Figure 8.8. The important dimensions of the distribution section are shown in Table 8.6.

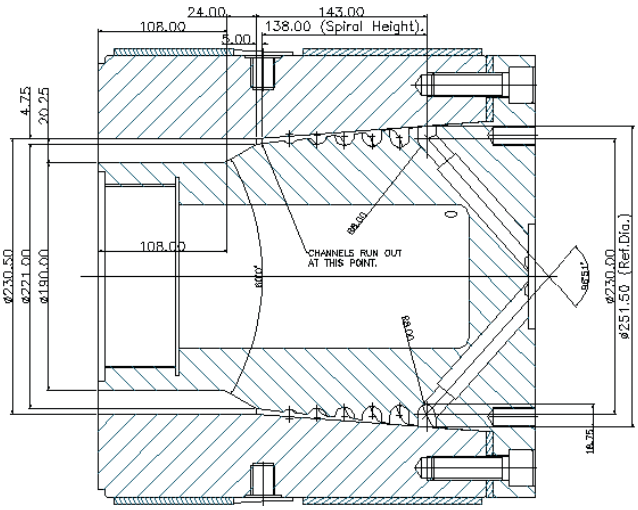

Figure 8.7 Dimensions of distribution section of Ø50–125 mm die

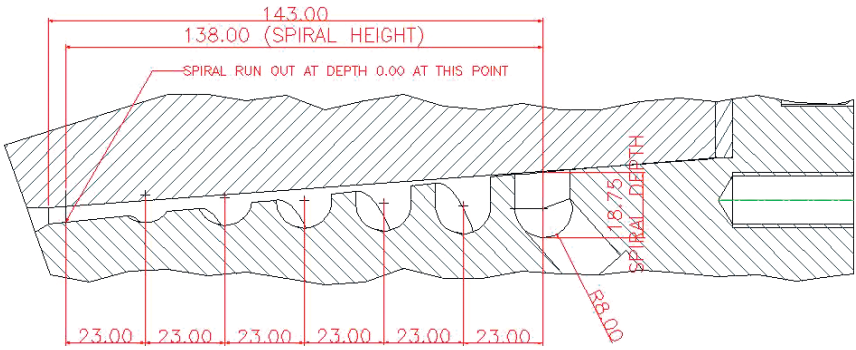

Figure 8.8 Dimensions of spirals of Ø50–125 mm die

Table 8.6 Important Dimensions of the Distribution Section

	# Name	Dimension	Description
1.	Reference diameter	⌀251.50 mm	Diameter of the body at the start of the spirals.
2.	Spiral height	138.00 mm	Distance from the middle of the start of the spiral to the middle of the end of the spiral.
3.	Spiral depth	18.75 mm	Depth at the start of the spiral.
4.	Spiral radius	8.00 mm	Radius at the bottom of the spirals.
5.	Gap at the end of the spiral	4.75 mm	Gap between the body and the mandrel at the end of the spiral. Usually measured at 5.00 mm after the end of the spiral.
6.	Number of ports	6	Number of ports feeding the spirals.
7.	Number of overlaps	6	The number of overlaps is usually the same as the number of spirals unless otherwise stated.

8.4.3 Section above the Spiral Mandrel

This section starts from the end of the spirals to the die exit. A part of this section is common for all the dies in the product range and part of it changes with the product size. For the simulation of a die the whole of this section (i. e., the common part and the changing part) is regarded as one section, therefore some of the dimensions are repeated every time a die is simulated for a specific size of product. As 4 dies are considered for simulation (i. e., ⌀125 × 17 SDR, ⌀125 × 11 SDR, ⌀50 × 17 SDR, and ⌀50 × 11 SDR), as detailed in Section 8.3, the geometry and dimensions of the section above the spirals for all 4 sizes of tooling are detailed below to complete the simulation of the 4 sizes of the pipes.

8.4.3.1 ⌀125 mm × 17 SDR

The first die to be drawn and simulated in this case is the one for ⌀125 mm × 17 SDR pipes. This die is for the largest size of pipes in the product range, with a wall thickness (7.36 mm) smaller than the one for ⌀125 mm × 11 SDR (11.36 mm). Therefore, it is likely to have a larger pressure drop for the maximum output of 300 kg/h, as defined in the project brief (Table 8.1). If the design of this size of die is satisfactory, then most probably it will be satisfactory for other sizes. The dimensions for the section above the spiral mandrel are shown in Figure 8.9. It should be noted that the simulation software requires the dimensions of the diameters of all the sections taken at the middle of the gap between the outer and inner rings, and the gap thickness is taken at the end of each section.

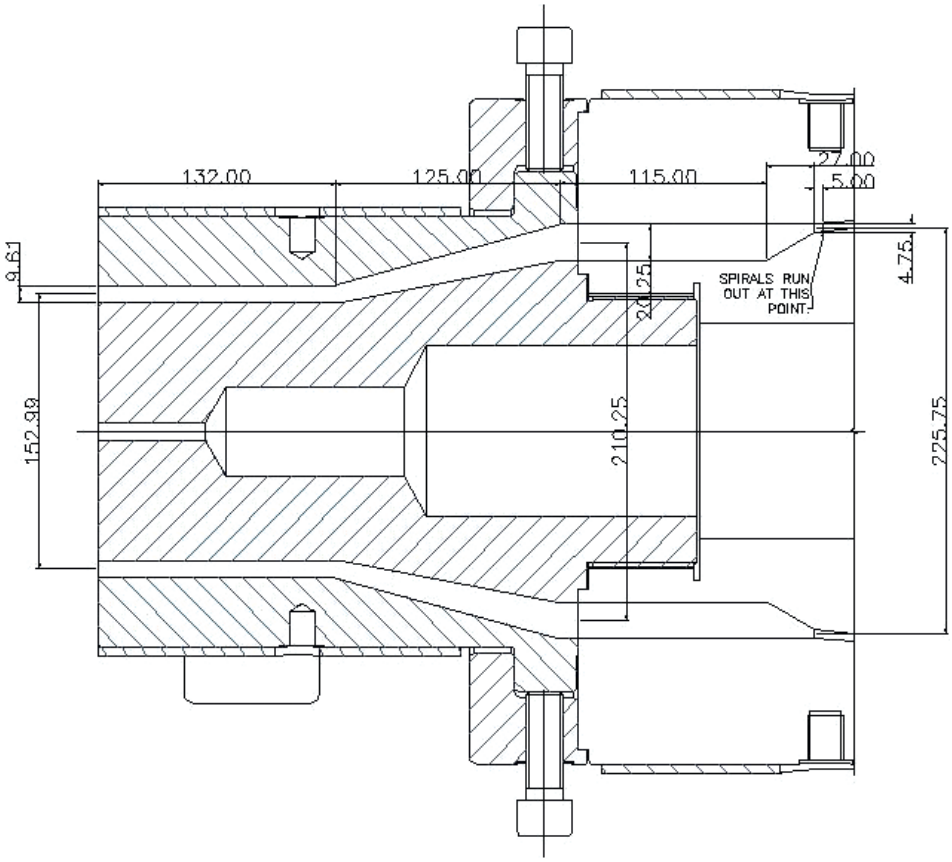

Figure 8.9 Dimensions of section above spiral mandrel of die Ø125 mm × 17 SDR

Table 8.7 Dimensions of the Section above the Mandrel (as They Are Put into the Simulation Software)

#	D [mm]	H [mm]	dH [mm]	Gb [mm]	Ge [mm]
01	225.75	5.0000	5.0000	4.75000	4.75000
02	210.25	32.0000	27.000	4.75000	20.2500
03	210.25	147.000	115.000	20.2500	20.2500
04	152.99	272.000	125.000	20.2500	9.61000
05	152.99	404.000	132.000	9.61000	9.61000

The first column (#) in Table 8.7 is the number of sections above the spiral mandrel. The second column, D, is the mean diameter of each of the sections. The third column, H, is the height from the beginning or above the spiral mandrel and dH is the height of each section. Gb is the gap at the beginning of the section and Ge is the gap at the end of the section.

The geometry for the section above the spiral mandrel for other sizes is shown below and the first three sections listed above are common to all the dies, as mentioned previously; therefore, the dimensions of these three sections are repeated in all drawings below for simulation purposes.

8.4.3.2 ⌀125 mm × 11 SDR

The geometry of the section above the spiral mandrel for the pipe size ⌀125 mm × 11 SDR is shown in Figure 8.10 and the dimensions a-re shown in Table 8.8.

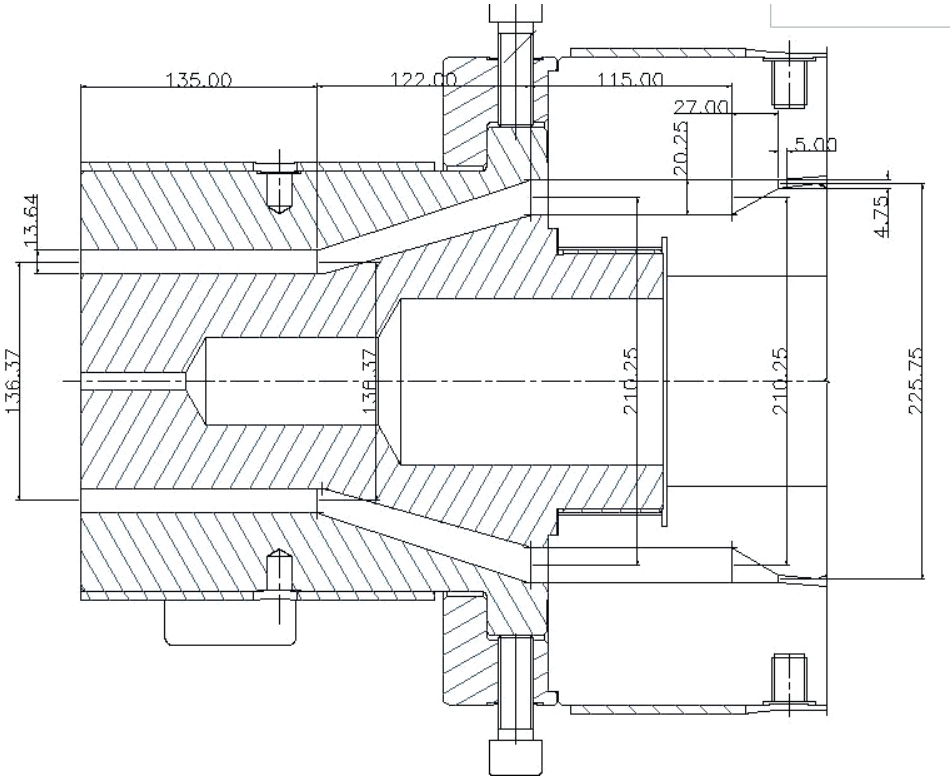

Figure 8.10 Dimensions of section above spiral mandrel of die ⌀125 mm × 11 SDR

Table 8.8 Dimensions of the Section above the Mandrel (as They Are Put into the Simulation Software)

#	D [mm]	H [mm]	dH [mm]	Gb [mm]	Ge [mm]
01	225.75	5.0000	5.0000	4.75000	4.75000
02	210.25	32.0000	27.000	4.75000	20.2500
03	210.25	147.000	115.000	20.2500	20.2500
04	136.37	269.000	122.000	20.2500	13.6400
05	136.37	404.000	135.000	13.6400	13.6400

8.4.3.3 ⌀50 mm × 17 SDR

The geometry of the section above the spiral mandrel for the pipe size ⌀50 mm × 17 SDR is shown in Figure 8.11 and the dimensions are shown in Table 8.9.

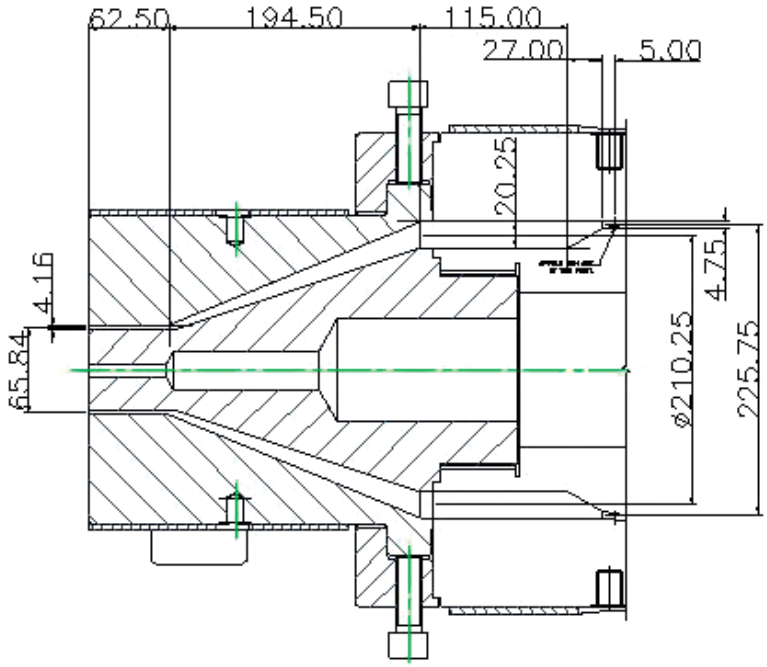

Figure 8.11 Dimensions of section above spiral mandrel of die ⌀50 mm × 17 SDR

Table 8.9 Dimensions of the Section above the Mandrel (as They Are Put into the Simulation Software)

#	D [mm]	H [mm]	dH [mm]	Gb [mm]	Ge [mm]
01	225.75	5.0000	5.0000	4.75000	4.75000
02	210.25	32.0000	27.000	4.75000	20.2500
03	210.25	147.000	115.000	20.2500	20.2500
04	65.84	341.500	194.500	20.2500	4.16000
05	65.84	404.000	62.5000	4.16000	4.16000

8.4.3.4 ⌀50 mm × 11 SDR

The geometry of the section above the spiral mandrel for the pipe size ⌀50 mm × 11 SDR is shown in Figure 8.12 and the dimensions are shown in Table 8.10.

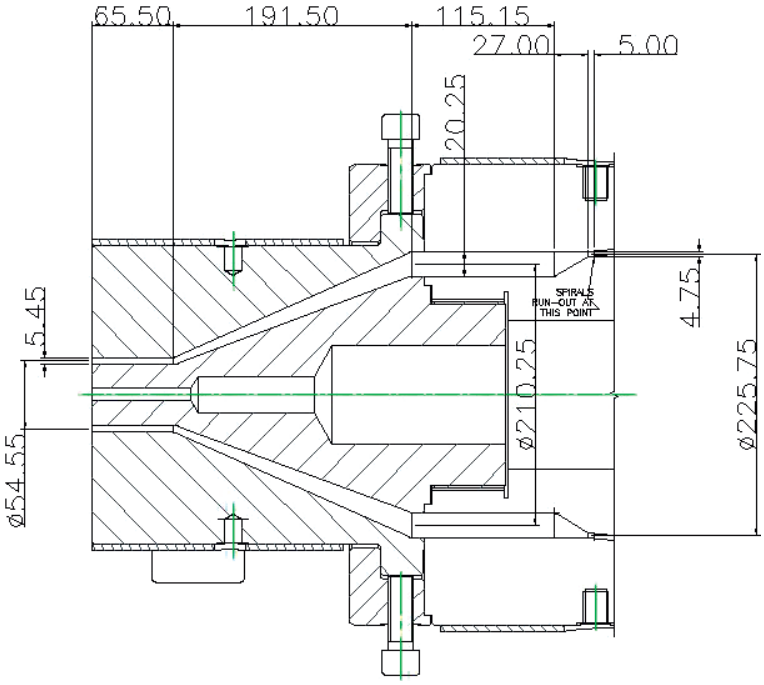

Figure 8.12 Dimensions of section above spiral mandrel of die ⌀50 mm × 11 SDR

Table 8.10 Dimensions of the Section above the Mandrel (as They Are Put into the Simulation Software)

#	D [mm]	H [mm]	dH [mm]	Gb [mm]	Ge [mm]
01	225.75	5.0000	5.0000	4.75000	4.75000
02	210.25	32.0000	27.000	4.75000	20.2500
03	210.25	147.000	115.000	20.2500	20.2500
04	54.55	338.50	191.500	20.2500	5.45000
05	54.55	404.000	65.5000	5.4500	5.45000

The die geometry of all the sections of the 4 pipe sizes has been defined above. This die geometry is linked with the project definition consisting of the material data and the processing conditions to simulate the flow characteristics of the polymer melt in the die.

8.5 Project Definition

8.5.1 Material Information

The information in Table 8.11, appertaining to the material, is defined and evaluated using the software. In this case a specific material was indicated by the customer; therefore, the information concerning this material is listed in Table 8.11.

Table 8.11 Material Information

Material name	Tasnee HDPE.
Material grade	Extrusion grade P100 Black.
Rheology data	Values of shear rate [s^{-1}] vs. viscosity [Pa·s] at three different temperatures supplied by the manufacturer; shown in Table 8.12. These raw values are put into the software as apparent values, and the software applies the Rabinowitsch correction to convert them into true values.
Thermodynamic properties in solid state	The values of melt temperature, freezing temperature, solid density, specific heat capacity, thermal conductivity, and specific heat of fusion were supplied by the manufacturer of the material. They are shown in Table 8.13.
Thermodynamic properties of melt	Melt density, specific heat capacity, and thermal conductivity are supplied by the manufacturer and shown in Table 8.14.

Table 8.12 Values of Shear Rate vs. Viscosity

Temperature [°C]	Shear rate [s^{-1}]	Viscosity [Pa·s]
190	2.70	19503
	7.23	9007
	15.40	5405
	33.30	3318
	95.0	1547
	218	822
	363	552
	528	356
210	2.55	18147
	6.77	8430
	14.4	5178
	30.9	3113
	87.50	1463
	199	850
	330	561
	479	399

Table 8.12 Values of Shear Rate vs. Viscosity *(continued)*

Temperature [°C]	Shear rate [s^{-1}]	Viscosity [Pa·s]
230	2.61	16048
	6.79	7551
	14.1	4620
	29.40	2926
	78.30	1427
	166	889
	258	632
	355	495

Table 8.13 Thermodynamic Properties in Solid State

1.	Melt temperature (T_m)	130.33 °C
2.	Freezing temperature	116.98 °C
3.	Density	0.9592 kg/m^3
4.	Specific heat capacity	2.5840 kJ/kg/°C
5.	Thermal conductivity	0.300 W/m/°C
6.	Specific heat of fusion	178.0 J/g

Table 8.14 Thermodynamic Properties of Melt

1.	Density	0.8135 kg/m^3
2.	Specific heat capacity	1.6749 kJ/kg/°C
3.	Thermal conductivity	0.2500 W/m/°C

The above values of rheology data and thermodynamic properties are inserted into the software to create a new material and are saved in the material database.

8.5.2 Processing Conditions

Material output rates are based on the maximum plasticizing capacity of the extruder of 300 kg/h for the largest size pipe of ⌀125 mm × 17 SDR; a melt temperature of 200 °C and a die temperature of 210 °C are used for simulation. This completes the input of data into the software and the software runs the simulation and lists the end results. The output for other sizes are worked out from the simulation results of each size for optimum results and tabulated at the end of the simulation results.

8.6 Simulation Results

For the simulation of the material flow characteristics through the die, the die geometry and processing conditions are put into the software. The software is used as a scientific calculator and the results are listed below. The only difference here is that the simulation is carried out initially for the 4 die geometries defined above and then the geometry for other sizes of the tooling section is changed in the software; the results are examined and the processing conditions are fine-tuned, if necessary, to get the best output for each size of the pipe.

8.6.1 Simulation Results of ⌀125 mm × 17 SDR Die

The first die to simulate, as said above, is the ⌀125 mm × 17 SDR die and results of all three sections of the die (i.e., feed section, distribution section, and section above the spirals to die exit) are given below:

8.6.1.1 Feed Section

The feed section is shown in Figure 8.6 and the dimensions are given in Table 8.5. The feed section is divided into 3 subsections, therefore the results are also shown in these three subsections in Table 8.15.

Table 8.15 Simulation Results of Variables in the Feed Section (⌀125 mm × 17 SDR)

Section #	Δp [MPa]	ΔP [MPa]	T [°C]	Shear rate [s^{-1}]	Shear stress [kPa]	Velocity [mm/s]
1.	0.709	19.094	200.86	8.382	61.133	40.144
2.	1.849	18.386	202.47	34.408	89.645	54.345
3.	0.675	16.763	203.82	69.014	107.929	84.914

The first column in Table 8.15 is the section number; Δp is the pressure drop in the section; ΔP is the total pressure drop in the die; T is the temperature at the end of each section; the fifth column is the shear rate at the wall of each section; the sixth column is the shear stress in each section; and the last column is the average velocity of the melt in each section.

The results in Table 8.15 show that the pressure drop in the first section (i.e., the straight section from the extruder to the branching of the feed to the spirals) is 0.709 MPa, the pressure drop in the first six branches is 1.849 MPa, and the pressure drop in the last six sections of the branches is 0.675 MPa. Therefore, the total pressure drop in the feed section is 3.169 MPa. The total pressure drop in the

whole system from the beginning of the extruder flange to the die exit is 19.094 MPa. The set value for the safe operation of the die is 20 MPa; therefore, this value of total pressure drop in the die is within the prescribed limits. The total change in temperature in the feed section is 2.96 °C, because the melt temperature is 200 °C and the die temperature is 210 °C. The shear rate in the first branch of the feed section is 8.382 s^{-1} and the minimum requirement to avoid melt stagnation is 8 s^{-1}. The shear stress values in all three subsections are also satisfactory, as the minimum required value is 30 kPa and the maximum is 140 kPa. Hence, the overall results are quite satisfactory in the feed section.

8.6.1.2 Distribution Section or Spiral Mandrel

This die for pipes of ⌀50–125 mm, as described above, has 6 ports feeding 6 spirals and each spiral is making a full turn around the circumference. In other words, the die has 6 starts and 6 overlaps. Important data extracted from the simulation results in the distribution section is listed below with explanatory notes.

- Pressure drop: The pressure drop from the beginning of the spirals through the rest of the die is the same as at the end of the feed section shown above, which is 15.862 MPa, and at the end of the spirals it is 4.0334 MPa, which is the pressure drop through the section after the spirals part of the mandrel to the die exit.
- Temperature change: The temperature at the beginning of the spirals is the same as at the end of the feed section, which is 203.82 °C, and at the end of the spirals it is 210.53 °C. This change in temperature is quite obvious, because the die temperature is 210 °C and the melt temperature at the entry to the die is 200 °C. Therefore, this change in the temperature is due to the melt temperature equalizing to the die temperature.
- Shear rate: The shear rate at the end of the feed section, from above, was 69.014 s^{-1}, and as the melt enters the spirals the shear rate drops slightly, due to the melt finding more room in the spirals than in the tubes feeding the spirals. As the spirals are getting shallower toward the end and more and more melt is being squeezed into the gap above the spirals, the shear rate in the channel is decreasing and the shear rate in the gap above is increasing. The shear rate at the end section of the spirals is 1.000 s^{-1} in the channel. The shear rate about halfway in the mandrel height is 148.24 s^{-1} in the gap over the channel. The shear rate at the end of the spirals over the land is 59.84 s^{-1}. The minimum required value of shear rate was stated above as 8 s^{-1}. The simulated shear rate in the section at the end of the spirals is 1.000 s^{-1}, because the melt has run out of the spirals into the gap. The actual value of shear rate in the gap over the channel is more accurate and is 60 s^{-1}.
- Shear stress: The shear stress in all areas of the die is very important, because it is the shear stress what causes the rubbing effect on the die, on one hand, and on

the other hand a high shear stress causes melt fracture. The minimum value for design purposes is 30 kPa and the maximum 140 kPa. The shear stress at the beginning of the spirals is 100 kPa, and at about 40 % of the spirals and in the gap over the land it is 107.99 kPa. Any fluctuations in between the start and the end of the spirals can be ignored for practical purposes, as the melt is moving in the axial direction, and the shear stresses on the melt tend to stabilize.

- Melt flow: In the spiral section of the mandrel the melt stream is divided into two parts, one flowing in the direction of the spiral and the other is leakage from the spirals. To demonstrate the importance of the melt flow in the spiral mandrel and its effect on the design of a good (and a bad) spiral mandrel geometry, a number of values of the melt flow in the spiral direction and the leakage were taken from the simulation results in the software. These values are plotted on a graph as shown in Figure 8.13.

  The most important observation is the shape of the curves. As it can be seen from Figure 8.13, the melt flow in the channel direction is decreasing to the zero value at the end of the spiral. On the other hand, the melt leakage from the channels starts with an almost zero value, peaks in the middle, and diminishes in the main direction at the end of the spirals. If the peak of this curve is to the left, it means that the melt is leaking too early out of the channels, which is caused by the excessive gap between the body and the mandrel at the end of the spirals. The result of this would be that the distribution of the melt around the circumference of the mandrel would vary excessively. Alternatively, if the peak of the curve is more to the right, it means that the leakage from the spiral is late due to an insufficient gap between the body and the mandrel at the end of the spirals. This would cause a high pressure drop in the mandrel and the rest of the system, which could make the die unstable. Therefore, it is important to balance the melt leakage in such a way that the peak of melt leakage is as close to the middle of the curve as possible.
- Flow rate at mandrel exit: The average flow rate at the mandrel exit is 1.707 cm^3/s with a variation of ± 3.36 %. The maximum limit of this variation is ± 4 % for a good die design.

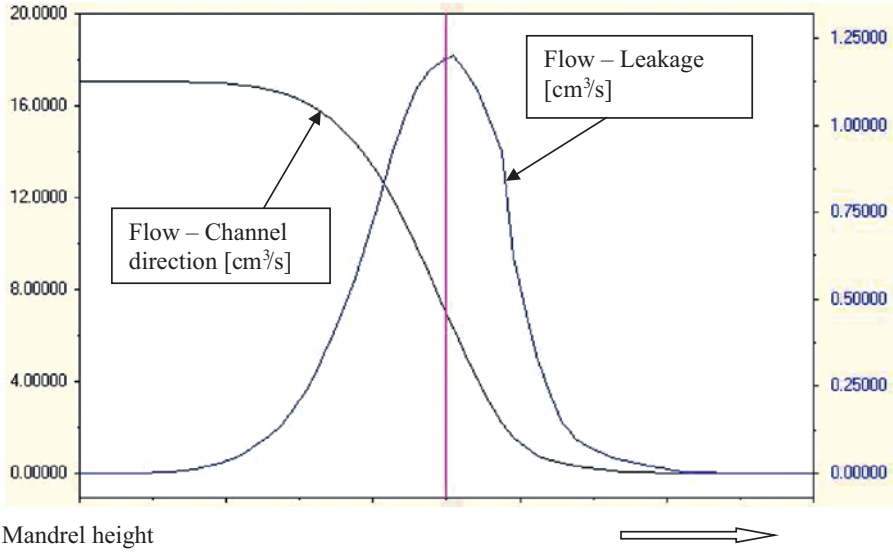

Figure 8.13 Flow in channel and flow leakage

- Total pressure drop on the spirals: 12.052 MPa.

8.6.1.3 Sections Past the Spirals

The third part of the die consists of all the parts after the spiral mandrel. The geometry of this section is shown in Figure 8.9 and this geometry is divided in 5 sections as detailed above. The processing conditions for this section are the same as for the whole die detailed above. The simulation results for all five sections past the spirals are listed in Table 8.16.

Table 8.16 Simulation Results of Variables in the Sections Past the Spirals (⌀125 mm × 17 SDR)

Section #	ΔP [MPa]	q1 [cm^3/s]	q2 [cm^3/s]	T [°C]	Shear rate [s^{-1}]	Shear stress [kPa]
Start #1	4.10	0.0007	1.783	210.73	67.67	106.98
Start #2	3.87	0.0080	1.699	210.89	9.08	60.62
Start #3	3.60	0.0080	1.710	211.13	3.53	43.72
Start #4	3.10	0.0000	1.708	211.60	8.50	56.46
Start #5	2.15	0.0000	1.708	212.61	22.61	78.23

- Total pressure drop through the section above the spirals: 4.0985 MPa
- Flow variation at the die exit: ± 0.05 %
- Total pressure drop through the die: 19.094 MPa

The above results show that the design of the die for pipes of ⌀125 mm × 17 SDR is satisfactory in all respects, especially for the specified grade of HDPE. This die would perform well with other grades of HDPE for pipes as well with very slight modifications, which any experienced engineer should be able to make if necessary.

8.6.2 Simulation Results of ⌀125 mm × 11 SDR Die

To simulate the die for this pipe, the tooling (i.e., pin and die), as detailed in Figure 8.10 and Table 8.8, are changed in the previous die. The complete die design with these changes is shown in Figure 8.3 for ⌀125 mm × 11 SDR pipes. As stated in the previous chapter, all the sections of the die before the tooling part remain common in all cases and only the tooling section is changed. Therefore, when simulating the die for other sizes the only dimensions to change are the last 2 sections of the tooling, as is shown in Figure 8.10. Hence, the last 2 sets of dimensions from Table 8.8 are changed in the software to get the new results.

The processing conditions are kept the same as in the previous die—namely, the output is kept at 300 kg/h, the melt temperature at 200 °C, and the die temperature at 210 °C. The simulation results for the ⌀125 mm × 11 SDR die are shown below:

8.6.2.1 Feed Section

The feed section is kept the same for all the dies, and the results below are slightly different due to the influence of the changed tooling part in the die, as shown in Table 8.17.

Table 8.17 Simulation Results of Variables in the Feed Section (⌀125 mm × 11 SDR)

Section #	Δp [MPa]	ΔP [MPa]	T [°C]	Shear rate [s^{-1}]	Shear stress [kPa]	Velocity [mm/s]
1.	0.709	17.794	200.86	8.380	59.003	40.144
2.	1.848	17.265	202.47	34.408	89.612	54.345
3.	0.675	15.417	203.02	69.014	107.893	84.914

The first column in Table 8.17 is the section number; Δp is the pressure drop in the section; ΔP is the total pressure drop in the die; T is the temperature at the end of each section; the fifth column is the shear rate at the wall of each section; the sixth column is the shear stress in each section; and the last column is the average velocity of the melt in each section.

The results in Table 8.17 are almost the same as in the previous simulation for the ⌀125 mm × 17 SDR die, except the total pressure drop ΔP, which is slightly lower than in the previous die. This is due to the larger annular gap in the land section of the new pin and die.

8.6.2.2 Distribution Section or Spiral Mandrel

Important data extracted from the simulation results in the distribution section is listed below with explanatory notes.

- Pressure drop: The pressure drop from the beginning of the spirals through the rest of the die is the same as at the end of the feed section shown above, which is 14.74 MPa, and at the end of the spirals it is 2.976 MPa, which is the pressure drop through the section after the spirals part of the mandrel to the die exit.
- Temperature change: The temperature at the end of the spirals in the main direction is 210.55 °C. It is obvious that the melt temperature entering the die was 200 °C and the die temperature is 210 °C, and therefore the melt has equalized to the die temperature.
- Shear rate: The shear rate in the spiral section of the mandrel starts at 0 and peaks in the middle of the mandrel at 148.11 s^{-1}, and drops at the end to 59.85 s^{-1}.
- Shear stress: The shear stress at the beginning of the spirals starts at 26.42 kPa, peaks in the middle at 131.95 kPa, and ends at 103.54 kPa at the end of the spirals.
- Melt flow: The melt flow in the channel direction and the flow leakage are also the same as in the previous simulation.
- Flow rate at mandrel exit: The average flow rate at the mandrel exit is 1.7073 cm^3/s ± 3.36 %, which is the same as in the previous simulation for the ⌀125 mm × 17 SDR die.
- Total pressure drop on the spirals: 11.764 MPa.

Therefore, it can be concluded that other than changes in the pressure from the beginning of the spirals and the end of the spirals, there are very little differences in any other values, because nothing has been changed in the geometry and processing conditions in the feed section and the distribution section. Different values of pressure drop in these sections are due to the change in geometry of the tooling.

8.6.2.3 Sections Past the Spirals

The third part of the die consists of all the parts after the spiral mandrel. The geometry of this section is shown in Figure 8.10 and this geometry is divided in 5 sections as detailed above. The processing conditions for this section are the same as for the whole die detailed above. The simulation results for all five sections past the spirals are listed in Table 8.18.

Table 8.18 Simulation Results of Variables in the Sections Past the Spirals (Ø125 mm × 11 SDR)

Section #	ΔP [MPa]	q1 [cm^3/s]	q2 [cm^3/s]	T [°C]	Shear rate [s^{-1}]	Shear stress [kPa]
Start #1	2.9955	0.0007	1.6846	210.86	64.40	105.55
Start #2	2.7718	0.0080	1.6958	210.78	9.33	59.38
Start #3	2.5150	0.0056	1.7054	211.22	3.58	42.55
Start #4	2.031	0.0000	1.7070	211.58	6.19	51.77
Start #5	1.286	0.0000	1.7070	212.20	12.35	64.99

As is seen from Table 8.18, with the change of geometry there is a noticeable difference in the pressure drop in the whole of the section past the spirals and there are slight differences in the shear rate and shear stress in the last 2 sections (i.e., sections #4 and #5).

- Total pressure drop through the section above the spirals: 2.9883 MPa
- Average flow rate at the die exit: 1.708 cm^3/s and flow variation at the die exit: ± 0.03 %
- Total pressure drop through the die: 18.21 MPa

It is apparent from above that the results of the die for pipes of Ø125 mm × 11 SDR are the same as for the die for Ø125 mm × 17 SDR in the first 2 sections, except that the pressure drop in the whole die is less than in the previous pipe die and so is the shear stress in the land area of the tooling. This means that if the equipment capacity allows for it, a higher output than 300 kg/h can be achieved.

8.6.3 Simulation Results of Ø50 mm × 17 SDR Die

The die of Ø50 mm × 17 SDR is for the smallest pipe in the product range and 17 SDR has the thinnest wall thickness of the pipe. Therefore, this die is chosen to establish the best processing conditions, which would also be suitable for Ø50 mm × 11 SDR. First of all, the tooling section is changed in the previous die; therefore, the dimensions for the tooling section are taken from Figure 8.11 and Table 8.9. The complete die with these changes is shown in Figure 8.4. The processing conditions initially are kept the same; upon the simulation results it was seen that the resultant pressure drop is 22.96 MPa, which is a lot more than what is acceptable for the design of a stable die. Therefore, the material output is reduced in the simulation to the point where the pressure drop is just below 20 MPa. The final output level achieved is 180 kg/h, which results in a pressure drop of 19.82 MPa. At this level of output, all the other results from the simulation are listed below.

8.6.3.1 Feed Section

The simulation results of the three subsections of the feed section are shown in Table 8.19.

Table 8.19 Simulation Results of Variables in the Feed Section (Ø50 mm × 17 SDR)

Section #	Δp [MPa]	ΔP [MPa]	T [°C]	Shear rate [s^{-1}]	Shear stress [kPa]	Velocity [mm/s]
1.	0.543	19.823	200.80	**5.480**	51.418	25.870
2.	1.586	19.280	202.34	20.198	76.902	32.607
3.	0.584	17.694	202.84	40.601	93.355	50.949

The results in Table 8.19 are different from the previous simulations for Ø125 mm × 17 and 11 SDR dies, because of the change in the processing conditions of a reduced output. In the previous two dies only the pressure drop was different and all the other values were the same or nearly the same. In this case, the shear rate in the first section is below the set limit of 8 s^{-1}, which means that over a long period of running this die there is a chance that the material at the wall of the flange adapter can degrade. Should this situation occur in production, a new flange adapter of reduced bore diameter can be used as a substitute. All the other values are within the set parameters.

- Total pressure drop in this section: 2.713 MPa

8.6.3.2 Distribution Section or Spiral Mandrel

Important data extracted from the simulation results in the distribution section is listed in Table 8.20 and in this case minimum and maximum values are listed, as the detailed explanations for these values have already been given in the previous sections.

Table 8.20 Simulation Results of Variables in the Distribution Section (Ø50 mm × 17 SDR)

#		Minimum	Maximum
1.	Pressure drop [MPa]	6.741	17.11
2.	Temperature [°C]	206.59	210.42
3.	Shear rate [s^{-1}] Mandrel Body	 1.000 1.000	 92.83 92.83
4.	Shear stress [kPa] Mandrel Body	 26.078 26.415	 117.22 117.22

In Table 8.20, a higher value of pressure drop is found at the beginning of the spirals and a lower value is found at the end of the spirals. A higher temperature is found at the wall of the body and the lowest temperature is found at the bottom of the channels.

Minimum and maximum shear rates and shear stresses vary throughout the distribution and can be summed up as follows:

1. The shear rate and shear stress in the body in the main direction are at the maximum in the middle of the distribution and at the minimum at the start.
2. The shear rate and shear stress in the channel direction above the channel are at the maximum halfway through the mandrel and at the minimum at the start of the channels.
3. The shear rate and shear stress in the channel direction and inside the channel are at the maximum between 30–40 % of the way from the beginning of the channels.

In all cases the shear stress is well below the critical level of 140 kPa. The melt flow is the same in shape as in Figure 8.13, which shows the flow in the channel and the leakage above the channel.

- Average volumetric melt flow rate: 1.0244 $cm^3/s \pm 3.75\%$
- Total pressure drop on the spirals: 10.367 MPa

8.6.3.3 Sections Past the Spirals

The third part of the die consists of all the parts after the spiral mandrel. The geometry of this section is shown in Figure 8.11 and this geometry is divided in 5 sections as detailed above. The processing conditions for this section are the same as for the whole die detailed above. The simulation results for all five sections past the spirals are listed in Table 8.21.

Table 8.21 Simulation Results of Variables in the Sections Past the Spirals (Ø50 mm × 17 SDR)

Section #	ΔP [MPa]	q1 [cm^3/s]	q2 [cm^3/s]	T [°C]	Shear rate [s^{-1}]	Shear stress [kPa]
Start #1	6.742	0.0000	1.0134	210.35	35.850	89.804
Start #2	6.553	0.0000	1.0150	210.47	5.354	49.264
Start #3	6.340	0.0000	1.240	210.66	2.084	35.090
Start #4	5.9413	0.0000	1.024	211.53	9.060	58.840
Start #5	4.0671	0.0000	1.024	213.79	177.86	135.340

As can be seen from Table 8.21, the changes in the output level and the geometry have resulted in a noticeable difference in the pressure drop and other values in the whole section past the spirals when compared with the previous die.

- Average flow rate at the die exit: 1.024 cm^3/s
- Flow variation at the die exit: ±0.08 %
- Total pressure drop through the die: 19.823 MPa

8.6.4 Simulation Results of ⌀50 mm × 11 SDR Die

In this case, the tooling for the ⌀50 mm × 11 SDR pipe was changed in the main die, as shown in Figure 8.12, and the dimensions are shown in Table 8.10. It should be noted that only the last 3 dimensions of ⌀50 mm × 17 SDR have been changed in the previous tooling section. As the mean diameter and the annular gap at the die exit have changed, the die gap is larger than in the case of the previous die for ⌀50 mm × 17 SDR. All other die dimensions are the same as before. With the larger gap at the die exit, the low pressure drop in the whole die and the lower shear stress in the land area allow for higher output. Therefore, the processing conditions are changed until the pressure drop is just below 20 MPa. This has resulted in an increased output of 210 kg/h. The other processing conditions are kept the same as in the case of the ⌀50 mm × 17 SDR die. The simulation results are listed below:

8.6.4.1 Feed Section

The simulation results of the three subsections of the feed section are shown in Table 8.22.

Table 8.22 Simulation Results of Variables in the Feed Section (⌀50 mm × 11 SDR)

Section #	Δp [MPa]	ΔP [MPa]	T [°C]	Shear rate [s^{-1}]	Shear stress [kPa]	Velocity [mm/s]
1.	0.581	19.729	200.78	**6.766**	55.088	31.619
2.	1.686	19.148	202.34	24.905	81.746	39.853
3.	0.619	17.462	202.86	50.021	98.902	62.270

The results in Table 8.22 show a slight change in the values from the previous simulation for the ⌀50 mm × 17 SDR die, because of the small changes in the geometry and processing conditions. From these results, all the values are within the prescribed limits except the shear rate in the first section, which is below the set limit of 8 s^{-1}. This means that over a long period of running this die there is a chance that the material at the wall of the flange adapter can degrade. Should this

situation occur in production, a new flange adapter of reduced bore diameter can be used as a substitute.

- Total pressure drop in this section: 2.713 MPa

8.6.4.2 Distribution Section or Spiral Mandrel

Important data extracted from the simulation results in the distribution section is listed in Table 8.23 and in this case minimum and maximum values are listed, as the detailed explanations for these values have already been given in the previous sections.

Table 8.23 Simulation Results of Variables in the Distribution Section (Ø50 mm × 11 SDR)

#		Minimum	Maximum
1.	Pressure drop [MPa]	5.83	16.84
2.	Temperature [°C]	206.55	210.52
3.	Shear rate [s^{-1}] Mandrel Body	 1.000 1.000	 114.93 114.93
4.	Shear stress [kPa] Mandrel Body	 26.078 26.415	 123.82 123.82

In Table 8.23, a higher value of pressure drop is found at the beginning of the spirals and a lower value is found at end of the spirals. A higher temperature is found at the wall of the body and the lowest temperature is found at the bottom of the channels.

Minimum and maximum shear rates and shear stresses vary throughout the distribution and can be summed up as follows:

1. The shear rate and shear stress in the body in the main direction are at the maximum in the middle of the distribution and at the minimum at the start.
2. The shear rate and shear stress in the channel direction above the channel are at the maximum halfway through the mandrel and at the minimum at the start of the channels.
3. The maximum values of shear rate and shear stress in the channel direction and inside the channel are at 30–40 % of the way from the beginning of the channels.

In all cases the shear stress is well below the critical level of 140 kPa. The melt flow is the same in shape as in Figure 8.13, which shows the flow in the channel and the leakage above the channel.

- Average volumetric melt flow rate: 1.252 $cm^3/s \pm 3.78\,\%$
- Total pressure drop on the spirals: 11.01 MPa

8.6.4.3 Sections Past the Spirals

The third part of the die consists of all the parts after the spiral mandrel. The geometry of this section is shown in Figure 8.12 and this geometry is divided in 5 sections as detailed above. The processing conditions for this section are the same as for the whole die detailed above except the output, which is 220 kg/h instead of 180 kg/h in the case of ⌀50 mm × 17 SDR. The simulation results for all five sections past the spirals are listed in Table 8.24.

Table 8.24 Simulation Results of Variables in the Sections Past the Spirals (⌀50 mm × 11 SDR)

Section #	ΔP [MPa]	q1 [cm^3/s]	q2 [cm^3/s]	T [°C]	Shear rate [s^{-1}]	Shear stress [kPa]
Start #1	5.832	0.0000	1.239	210.43	44.066	95.194
Start #2	5.632	0.0000	1.241	210.57	6.577	52.856
Start #3	5.403	0.0000	1.251	210.77	2.558	37.869
Start #4	4.973	0.0000	1.251	211.68	10.453	61.607
Start #5	3.137	0.0000	1.251	213.57	152.06	130.49

As can be seen from Table 8.24, the changes in the output level and the geometry have resulted in a small difference in the pressure drop and other values in the whole section past the spirals when compared with the previous die.

- Pressure drop above the mandrel: 5.834 MPa.
- Average flow rate at the die exit: 1.252 cm^3/s
- Flow variation at the die exit: ± 0.17 %
- Total pressure drop through the die: 19.729 MPa

The above results are similar to those in the case of the ⌀50 mm × 17 SDR die, because the difference in the annuli dimensions has been compensated by an increased output.

8.6.5 Simulation Results of Other Sizes in the Pipe Range

The specifications of 6 pipe sizes of SDR 11 and 6 pipes sizes of SDR 17 are given in Table 8.2, out of which 2 sizes of each SDR have been simulated and detailed results of these sizes have been given above with the necessary explanations. These sizes are the largest and smallest in the range; all the other sizes fall within the range of these two. The values of all the variables would be within the values of the sizes listed above. One thing that is uncertain is the output level of the other sizes, which could fit within acceptable limits. Therefore, using the geometries of

the pins and dies in Table 8.2 and varying the land length in proportion to the die gaps at the end, the optimum output levels are established using the software and the results are given in Table 8.25.

Table 8.25 Optimum Output for Pipe Sizes Ø50–125 mm for SDR 11 and 17 with Varying Land Lengths of Tooling

Pipe spec.	Land length [mm]	Output [kg/h]
SDR 11		
50	65.50	220.00
63	82.50	240.00
75	122.70	255.00
90	147.30	280.00
110	180.00	300.00
125	135.00	300.00
SDR 17		
50	62.50	180.00
63	77.85	200.00
75	86.10	225.00
90	103.20	255.00
110	126.15	290.00
125	132.00	300.00

Sufficient information for the design of pipe dies for all sizes from Ø50 mm to Ø125 mm has been given above. The geometry of the first two sections (i.e., feed section and distribution section) is common to all sizes of dies within the described range. The only geometry that needs to be changed is the land length in the end part of the pin and the die, which is given in Table 8.25. The resultant optimum outputs for each size of the pipe have also been given. The only variations in the successful manufacturing of pipes within the given range would be due to variations of the different grades of polymer, and slight adjustments to the melt and die temperatures would give satisfactory results. In these cases the level of output may vary slightly, but the overall results would be very close to the output values given above.

9 Monolayer Die for Pipes ∅140 mm to ∅315 mm

The complete design of pipe dies of diameters 50 mm to 125 mm, most commonly used for water and gas supplies, with 2 different pressure ratings based on Standard Dimension Ratios (SDR) of 11 and 17 SDR has been given in Chapter 8. The range of diameters 50 mm to 125 mm was based on reasonable geometry dimensions, which can be manufactured economically. Too large a range of sizes would make the tooling for smaller diameter pipes more expensive to manufacture, and the production costs would also be higher due to longer start-up times and a higher power consumption for heating the die. Therefore, the range of sizes to be made from a particular die is kept as small as practical.

The next range of pipe sizes to be made from a die is in the range of diameters 140 mm to 315 mm. The pipe sizes within this range according to European Standards are 140 mm, 160 mm, 180 mm, 200 mm, 225 mm, 250 mm, 280 mm, and 315 mm. Polyethylene (PE) pipes according to European Standards are produced in different pressure grades, or PN grades, indicating the pressure in bars the pipe can support with water at 20 °C.

Different grades of PE have different values of PN. A typical relationship for different grades of PE, PN values, and SDR is given in Table 9.1.

Table 9.1 PN Values for Different Grades of PE and SDR 11, 17, and 26

	SDR 11	SDR 17	SDR 26
PE 40	PN 6	PN 4	-
PE 80	PN 12.5	PN 8	PN 5
PE 100	PN 16	PN 10	PN 6

The relationship between PN and SDR, given in the BS EN 12201-2 Standards, is given by the following formula:

$$PN = \frac{20\sigma_S}{SDR - 1} \tag{9.1}$$

where σ_S is the design stress.

PE pipe sizes in the range of ⌀140 mm to ⌀315 mm, according to the above Standards, for the most commonly used SDR 11 ,17, and 26, are given in Table 9.2.

Table 9.2 Pipe Sizes–Outside Diameters with Corresponding Inside (Mean) Diameters

Outside diameter [mm]	SDR 11 [mm]	SDR 17 [mm]	SDR 26 [mm]
140	113.2	122.4	128.5
160	129.2	139.9	146.8
180	145.4	157.4	165.4
200	161.6	174.9	183.7
225	181.8	196.7	206.8
250	202.2	218.8	229.7
280	226.5	245.0	257.4
315	247.2	275.6	289.4

The figures corresponding to the outside diameter in Table 9.2 are the inside diameters of the pipes for different SDR values. For the sake of simplicity, the sizes of the pipes used here for the die design will be based on SDR 11, 17, and 26. It is obvious from Table 9.2 that the higher the SDR value, the larger are the inside diameters, and vice versa.

To follow the same design strategy as in previous chapters, the next steps are followed:

9.1 Design Brief

The information regarding the products to be manufactured, materials used, processing conditions, and equipment installed at the plant are collected and shown in Table 9.3.

Table 9.3 Design Brief

1.	Product	⌀140 mm to ⌀315 mm pipes.
2.	Product range	All sizes of pipes as given above and inside diameters based on SDR 11 and 17, given in Table 9.4.
3.	Wall thicknesses	See the calculations in Table 9.4.
4.	Material used	HDPE P100 specified; alternatively, P80 can be used in some cases.
5.	Rheology data	Obtained from the material manufacturers by the customer.

6.	Thermodynamic properties	Thermodynamic properties obtained from the material manufacturers and supplied by the customer.
7.	Extruder	ø60 mm barrier screw extruder capable of plasticizing 400 kg/h of HDPE.
8.	Calibrators	Calibrators were supplied by the manufacturer of the vacuum bath and no further information was available.
9.	Cooling bath	Adequate vacuum bath and spray cooling baths facility installed.
10.	Haul-off	Suitable for the product range installed.
11.	Cutter	Does not concern the die design.
12.	Winder	Does not apply in this case, as the pipes would be cut to set lengths.

9.2 Calculations of Draw Down Ratios for Tooling Sizes

The calculations of the inside diameters and wall thicknesses based on SDR 11, 17, and 26 and the sizes of the pins and dies using an adequate draw down ratio, along with the land length of the die, are given in Table 9.4.

Table 9.4 Draw Down Ratios and Tooling Sizes

1	2	3	4	5	6	7	8	9	10	11	12
	Pipe spec.	Pipe OD [mm]	Pipe ID [mm]	Wall thickness [mm]	Die ID [mm]	Pin OD [mm]	DDR	Layer thickness at die exit [mm]	DRB	Die land length [mm]	Max. output [kg/h]
SDR11											
1	140	140.00	114.55	12.73	154.0	126.00	1.21	14.00	1.00	210	370
2	160	160.00	130.91	14.55	176.0	144.00	1.21	16.00	1.00	240	380
3	180	180.00	147.27	16.36	198.00	162.00	1.21	18.00	1.00	270	400
4	225	225.00	184.10	20.45	247.50	202.50	1.21	22.50	1.00	338	400
SDR17											
5	140	140.00	123.53	8.24	168.00	148.24	1.44	9.88	1.00	148	340
6	160	160.00	141.18	9.41	192.00	169.41	1.44	11.29	1.00	169	360
7	180	180.00	158.82	10.59	216.00	190.59	1.44	12.71	1.00	191	380
8	225	225.0	198.53	13.24	270.00	238.24	1.44	15.88	1.00	238	400
9	250	250.00	220.59	14.71	300.00	264.71	1.44	17.65	1.00	265	420
10	280	280.00	247.06	16.47	336.00	296.47	1.44	19.76	1.00	296	430
11	315	315.00	277.94	18.53	378.0	333.53	1.44	22.24	1.00	334	450

Table 9.4 Draw Down Ratios and Tooling Sizes *(continued)*

1	2	3	4	5	6	7	8	9	10	11	12
	Pipe spec.	Pipe OD [mm]	Pipe ID [mm]	Wall thick-ness [mm]	Die ID [mm]	Pin OD [mm]	DDR	Layer thick-ness at die exit [mm]	DRB	Die land length [mm]	Max. output [kg/h]
SDR26											
12	250	250.00	230.77	9.26	300.00	276.92	1.44	11.54	1.00	173	380
13	280	280.00	258.46	10.77	336.00	310.15	1.44	12.92	1.00	194	400
14	315	315.00	290.77	12.12	378.00	348.92	1.44	14.54	1.00	218	415

Columns 1–10 in Table 9.4 are normal pre-design calculations; column 11 is the die land length, which in this case has been fixed as 15 times the layer thickness at the die exit. Column 12 is obtained from the die simulation results, which are explained later in the chapter.

9.3 Initial Die Design

From the sizes of die and pin given in Table 9.4, initially the die is designed for a ⌀315 mm × 17 SDR pipe using the die inside diameter of 378.00 mm, the pin outside diameter of 333.53 mm, and the land length of 334.00 mm. The design of the complete die is shown in Figure 9.1. The design of the initial die is slightly different to the previous dies discussed above. In this case, the die mandrel has 8 spirals, whereas in the previous dies 4–6 spiral designs were used. This is due to the physical size of the die. For the same reason, the inside of the mandrel and the pin are hollowed out to reduce the weight of the die, and internal heaters are fitted for ease of heating up the die at the start of the operation and also for a better temperature control. In Figure 9.2, the same die is shown with the tooling for ⌀140 mm × 17 SDR pipes.

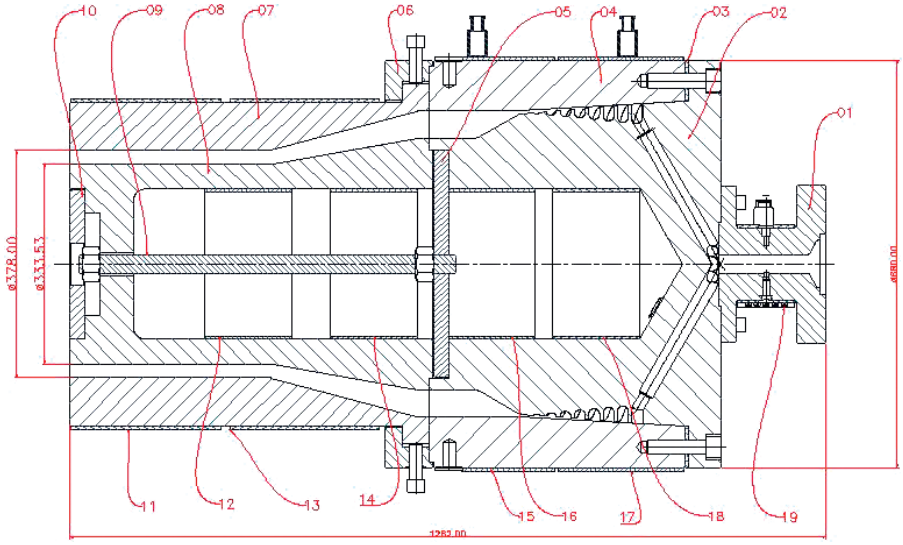

Figure 9.1 G. A. of Ø315 mm × 17 SDR die head

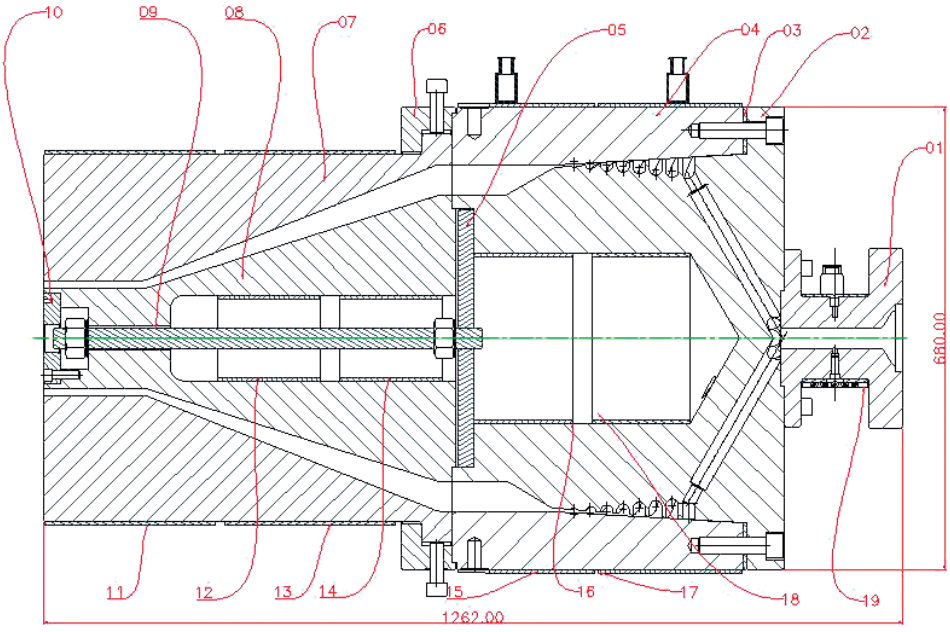

Figure 9.2 G. A. of Ø140 mm × 17 SDR die head

The names of the parts relating to the numbers in the above dies as referred in the text are shown in Table 9.5.

Table 9.5 Part Names

Part no.	Part name
01.	Flange adapter
02.	Spiral mandrel
03.	Mandrel spacer
04.	Die body
05.	Mandrel front plate
06.	Die clamp ring
07.	Die bush
08.	Pin (or mandrel)
09.	Pin mounting bolt
10.	Pin front plate
11.	Die heater 1
12.	Pin internal heater 1
13.	Die heater 2
14.	Pin internal heater 2
15.	Body heater 1
16.	Mandrel internal heater 1
17.	Body heater 2
18.	Mandrel internal heater 2
19.	Flange heater

9.4 Die Geometry

For simulation purposes, the die geometry is divided into three parts as described previously. The geometry and dimensions of each part are shown below:

9.4.1 Feed Section

Figure 9.3 shows the necessary dimensions of the die feed section and these dimensions are used for the simulation of this section. The die feed section consists of a straight section from the extruder flange to the branching of the feed holes that connect to the spirals. In this case there are 8 spirals; therefore, there are

8 branches of equal sizes arranged in a star shape to feed 8 spirals. Each branch has a large diameter hole in the beginning, which is reduced in size to match with the dimensions of the spirals. Table 9.6 shows the dimensions of the feed section.

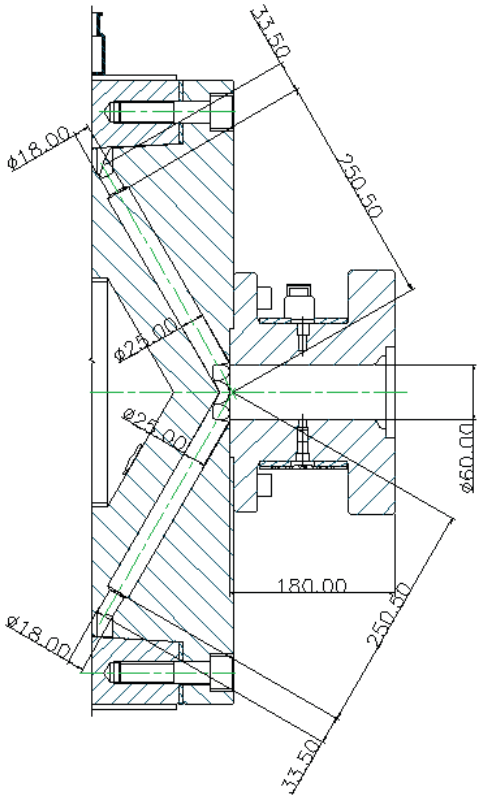

Figure 9.3 Dimensions of feed ø140 mm–315 mm die head

Table 9.6 Dimensions of Die Feed Section for Flow Simulation

Section #	Splits	L [mm]	L/D	D [mm]	S [mm^2]
01	1	180	3.00	60.00	2827.43
02	8	250.50	10.02	25.00	490.87
03	8	33.50	1.86	18.00	254.67

9.4.2 Distributor or Spiral Mandrel Section

The geometry of this section is made up of the geometries of the body, mandrel, and spirals on the mandrel. The geometry of this section is shown in Figure 9.4. The important dimensions of the spirals are shown in Figure 9.5. These dimensions are further explained in Table 9.7.

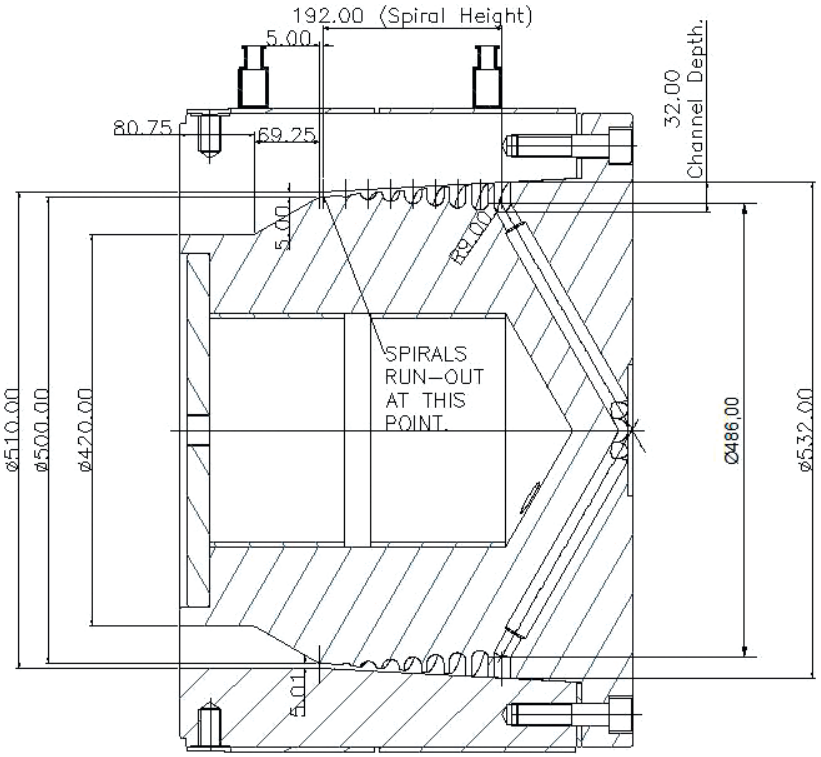

Figure 9.4 Dimensions of distribution section of ⌀140 mm–315 mm die head

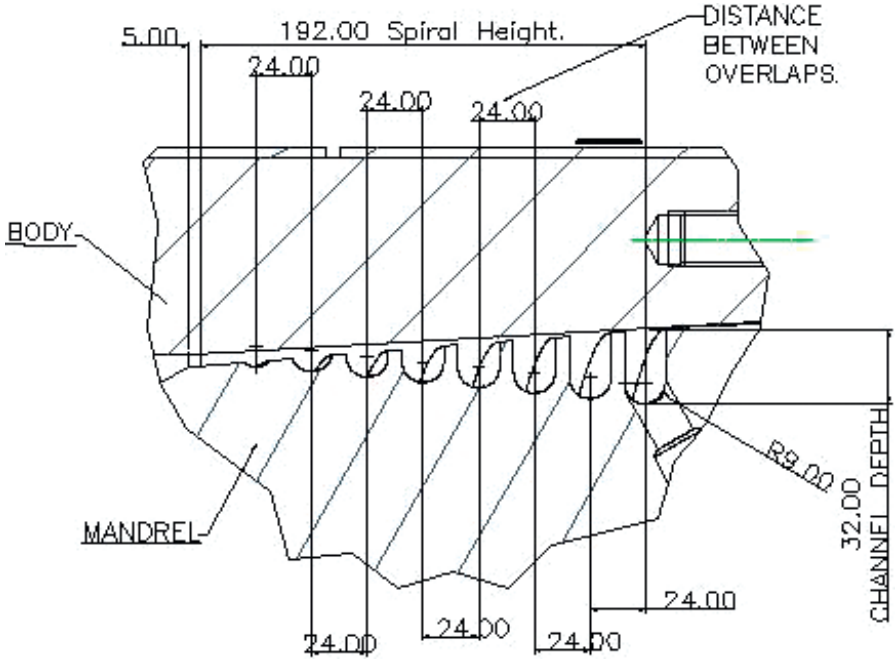

Figure 9.5 Dimensions of spirals of ⌀140 mm–315 mm die head

Table 9.7 Dimensions of Distribution Section for Flow Simulation

	# Name	Dimension	Description
1.	Reference diameter	⌀532.00 mm	Diameter of the body at the start of the spirals.
2.	Spiral height	192.00 mm	Distance from the middle of the start of the spiral to the middle of the end of the spiral.
3.	Spiral depth	32.00 mm	Depth at the start of the spiral.
4.	Spiral radius	9.00 mm	Radius at the bottom of the spirals.
5.	Gap at the end of the spiral	5.00 mm	Gap between the body and the mandrel at the end of the spiral. Usually measured at 5.00 mm after the end of the spiral.
6.	Number of ports	6	Number of ports feeding the spirals.
7.	Number of overlaps	6	The number of overlaps is usually the same as the number of spirals unless otherwise stated.

9.4.3 Section above the Spirals

As stated in the previous chapters, this section starts from the end of the spirals to the die exit. The first part of this section, which is contained between the die body and the spiral mandrel and a small parallel section between the die and pin, is common to all the dies in the product range. The second and third part of this section, which are contained between the die bush and pin, change with the change of product size. For simulation purposes, all these sections are treated as one section above the spirals. Consequently, the dimensions of the common section are repeated in the simulation of all the dies. In Table 9.4, 14 sizes of the pipes are listed and all the sizes were simulated to achieve a satisfactory optimum output from the die as shown in Table 9.4, but the detailed simulation results of only 6 pipe sizes of the die are selected. The selected sizes are: ⌀315 mm × 26 SDR, ⌀315 mm × 17 SDR, ⌀250 mm × 17 SDR, ⌀140 mm × 17 SDR, ⌀225 mm × 11 SDR, and ⌀140 mm × 11 SDR. Therefore, the detailed geometry of the section above the spirals of the 6 selected dies is given below.

9.4.3.1 ⌀315 mm × 26 SDR

This is the largest pipe in the range with a thinner wall than the SDR 17 pipe of the same size. Therefore, it is assumed that if the simulation results for this size of the die are satisfactory for the maximum output, then they would be satisfactory for a SDR 17 for the same size of the pipe. The detailed dimensions of this size of the die are given in Figure 9.6 and the dimensions required for the simulation are shown in Table 9.8.

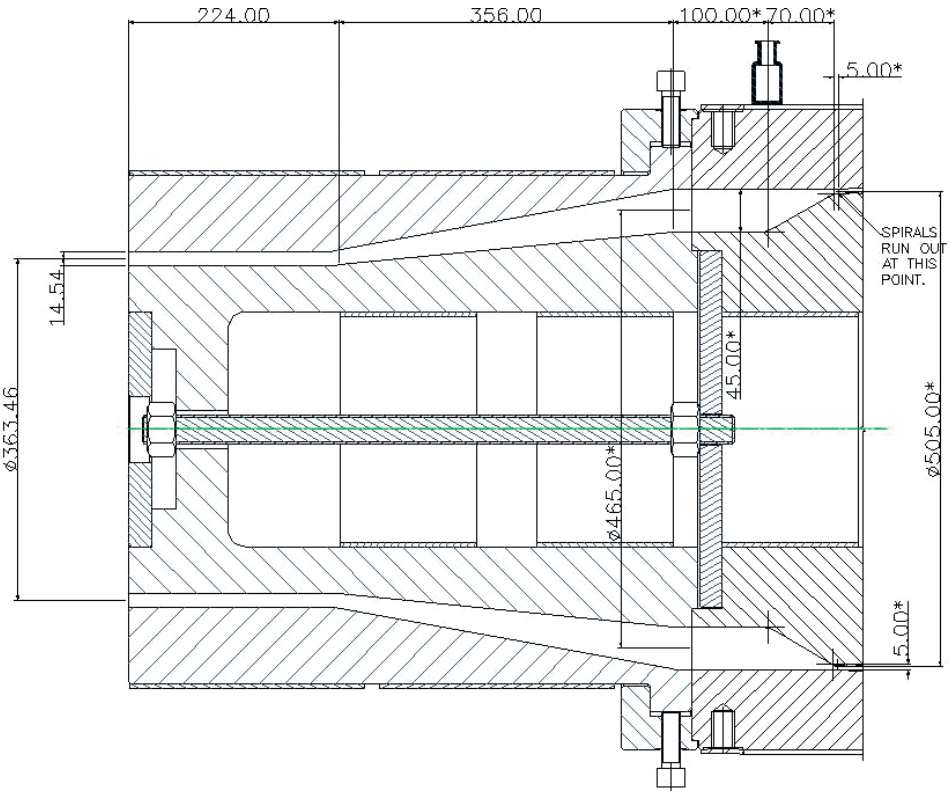

Figure 9.6 Dimensions of section above spirals of die ⌀315 mm × 26 SDR

Table 9.8 Dimensions of the Section above the Mandrel (as They Are Put into the Simulation Software, ⌀315 mm × 26 SDR)

#	D [mm]	H [mm]	dH [mm]	Gb [mm]	Ge [mm]
01	505.00	5.0000	5.0000	5.00000	5.00000
02	465.00	75.0000	70.000	5.00000	45.0000
03	465.00	175.000	100.000	45.0000	45.0000
04	363.46	531.000	356.000	45.0000	14.5400
05	363.46	755.00	224.00	14.5400	14.5400

The first column (#) in Table 9.8 is the number of sections above the spiral mandrel; the second column, D, is the mean diameter of each of the sections. The third column, H, is the height from the beginning or above the spiral mandrel and dH is the height of each section. Gb is the gap at the beginning of the section and Ge is the gap at the end of the section.

The geometry for the section above the spiral mandrel for other sizes is shown below and, as mentioned above, the first three sections are common to all the dies in the range; therefore, these 3 dimensions are repeated in every die.

9.4.3.2 Ø315 mm × 17 SDR

The geometry of the section above the spirals for the pipe size Ø315 mm × 17 SDR is shown in Figure 9.7 and the dimensions are shown in Table 9.9.

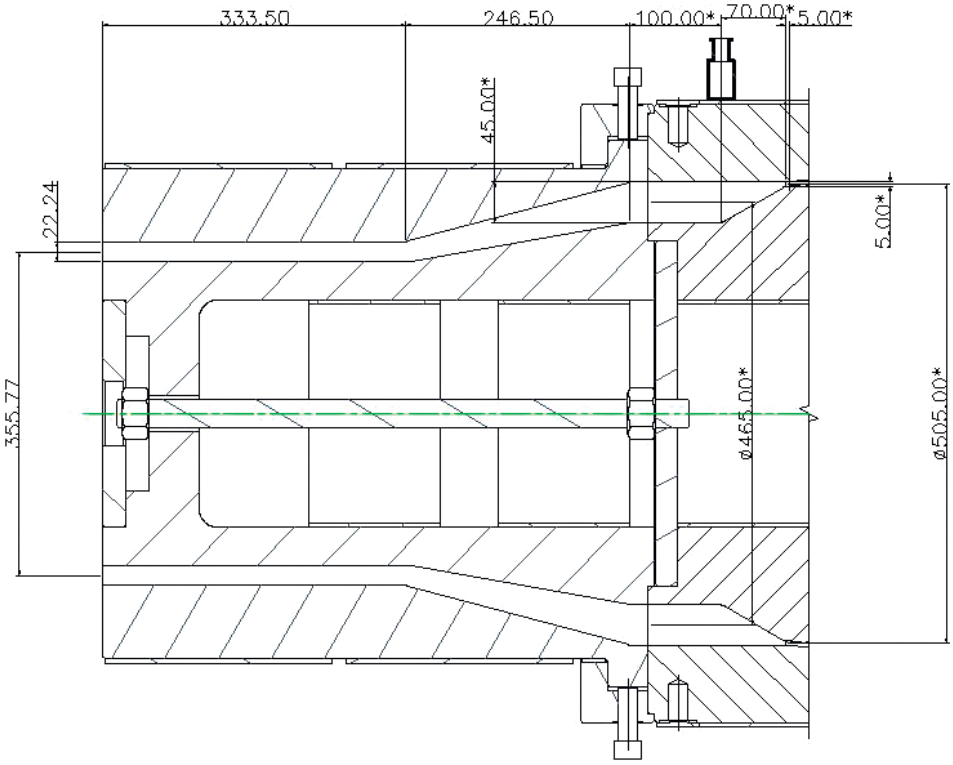

Figure 9.7 Dimensions of section above spirals of die Ø315 mm × 17 SDR

Table 9.9 Dimensions of the Section above the Mandrel (as They Are Put into the Simulation Software, Ø315 mm × 17 SDR)

#	D [mm]	H [mm]	dH [mm]	Gb [mm]	Ge [mm]
01	505.00	5.0000	5.0000	5.00000	5.00000
02	465.00	75.0000	70.000	5.00000	45.0000
03	465.00	175.000	100.000	45.0000	45.0000
04	355.77	421.50	246.50	45.0000	22.2400
05	355.77	755.00	333.50	22.2400	22.2400

9.4.3.3 ⌀250 mm × 17 SDR

The geometry of the section above the spirals for the pipe size ⌀250 mm × 17 SDR is shown in Figure 9.8 and the dimensions are shown in Table 9.10.

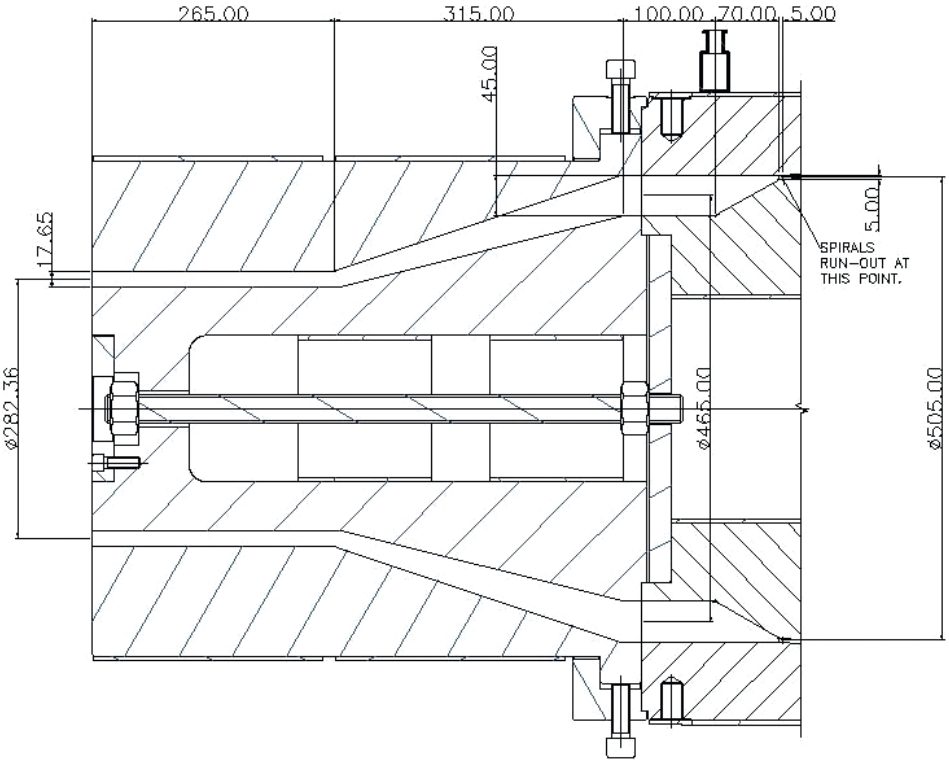

Figure 9.8 Dimensions of section above spirals of die ⌀250 mm × 17 SDR

Table 9.10 Dimensions of the Section above the Mandrel (as They Are Put into the Simulation Software, ⌀250 mm × 17 SDR)

#	D [mm]	H [mm]	dH [mm]	Gb [mm]	Ge [mm]
01	505.00	5.0000	5.0000	5.00000	5.00000
02	465.00	75.0000	70.000	5.00000	45.0000
03	465.00	175.000	100.000	45.0000	45.0000
04	282.36	490.000	315.000	45.0000	22.2400
05	282.36	755.00	265.000	22.2400	22.2400

9.4.3.4 ⌀140 mm × 17 SDR

The geometry of the section above the spirals for the pipe size ⌀140 mm × 17 SDR is shown in Figure 9.9 and the dimensions are shown in Table 9.11.

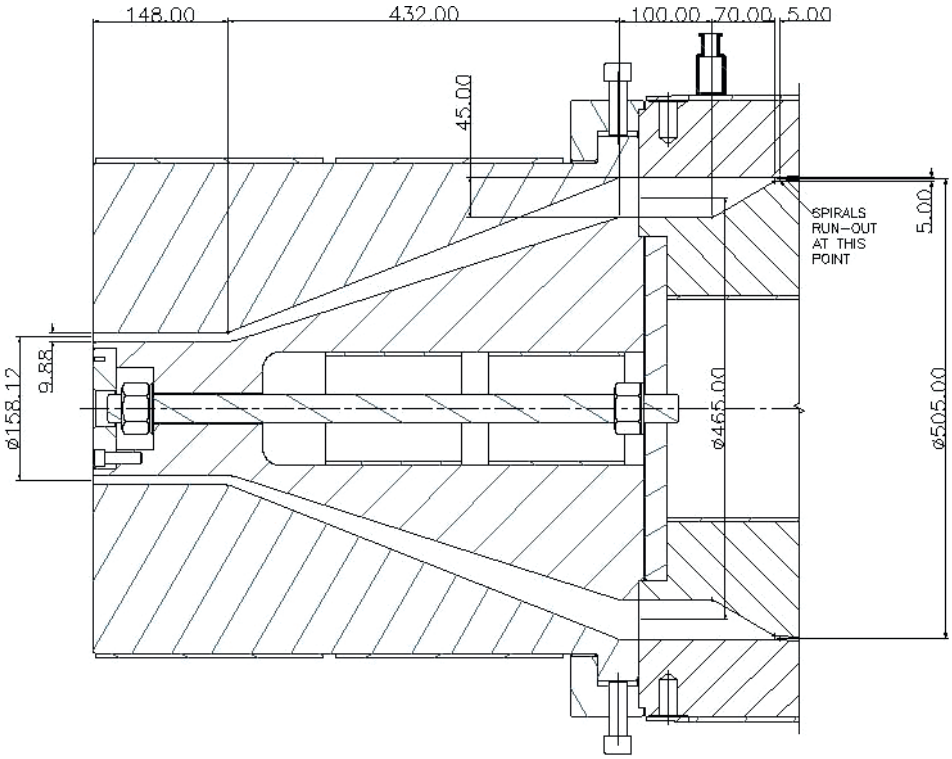

Figure 9.9 Dimensions of section above spirals of die Ø140 mm × 17 SDR

Table 9.11 Dimensions of the Section above the Mandrel (as They Are Put into the Simulation Software, Ø140 mm × 17 SDR)

#	D [mm]	H [mm]	dH [mm]	Gb [mm]	Ge [mm]
01	505.00	5.0000	5.0000	5.0000	5.0000
02	465.00	75.0000	70.000	5.0000	45.000
03	465.00	175.000	100.000	45.000	45.000
04	158.12	607.000	432.000	45.000	9.8800
05	158.12	755.00	148.000	9.8800	9.8800

9.4.3.5 Ø225 mm × 11 SDR

The geometry of the section above the spirals for the pipe size Ø225 mm × 11 SDR is shown in Figure 9.10 and the dimensions are shown in Table 9.12.

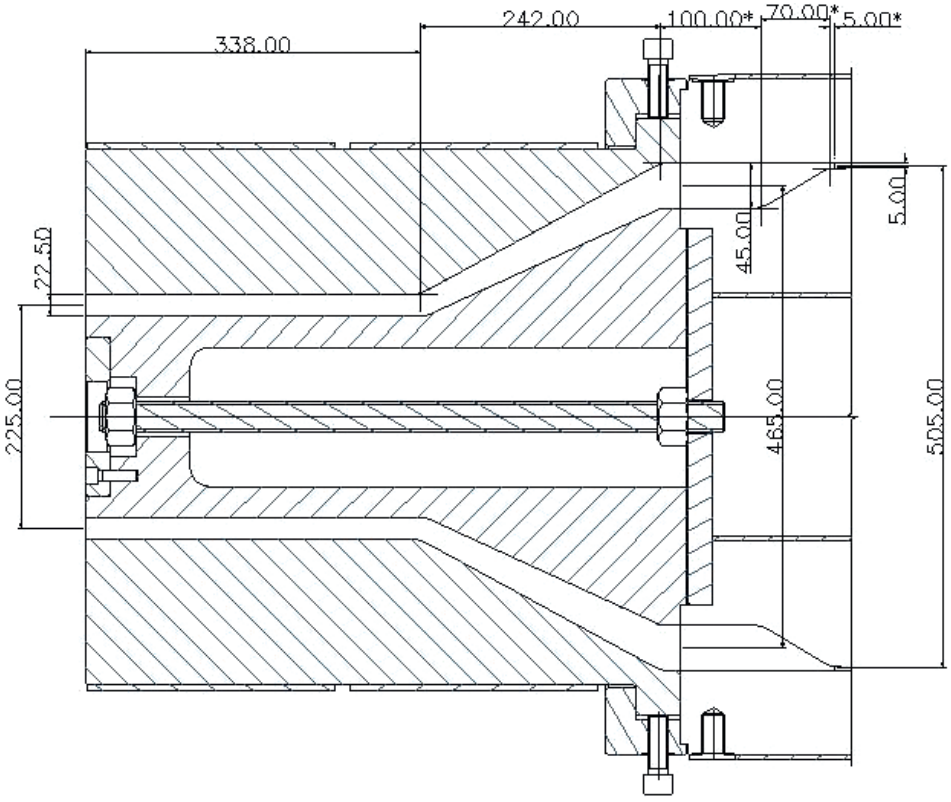

Figure 9.10 Dimensions of section above spirals of die ⌀225 mm × 11 SDR

Table 9.12 Dimensions of the Section above the Mandrel (as They Are Put into the Simulation Software, ⌀225 mm × 11 SDR)

#	D [mm]	H [mm]	dH [mm]	Gb [mm]	Ge [mm]
01	505.00	5.0000	5.0000	5.0000	5.0000
02	465.00	75.0000	70.000	5.0000	45.000
03	465.00	175.000	100.000	45.000	45.000
04	225.00	417.000	242.000	45.000	22.500
05	225.00	755.00	338.000	22.500	22.500

9.4.3.6 ⌀140 mm × 11 SDR

The geometry of the section above the spirals for the pipe size ⌀140 mm × 11 SDR is shown in Figure 9.11 and the dimensions are shown in Table 9.13.

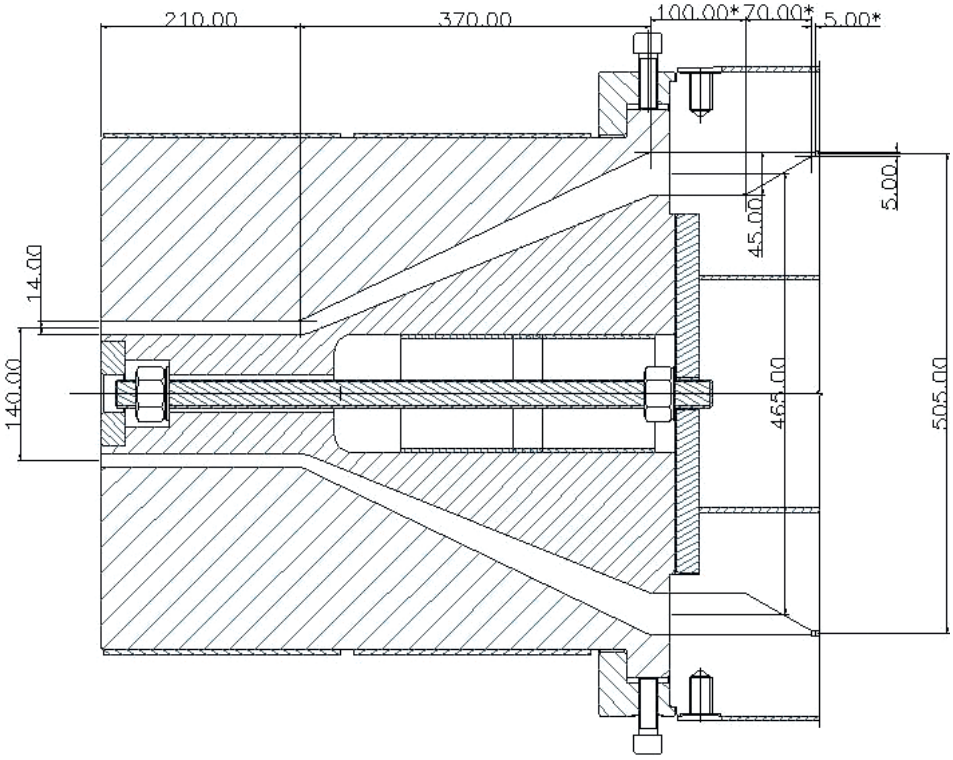

Figure 9.11 Dimensions of section above spirals of die Ø140 mm × 11 SDR

Table 9.13 Dimensions of the Section above the Mandrel (as They Are Put into the Simulation Software, Ø140 mm × 11 SDR)

#	D [mm]	H [mm]	dH [mm]	Gb [mm]	Ge [mm]
01	505.00	5.0000	5.0000	5.0000	5.0000
02	465.00	75.0000	70.000	5.0000	45.000
03	465.00	175.000	100.000	45.000	45.000
04	140.00	545.000	370.000	45.000	14.000
05	140.00	755.00	210.000	14.000	14.000

The dimensions of all the sections have been defined above and the dimensions of six tooling sections or the sections above the mandrel have been defined for the simulation of the melt characteristics through the dies. To complete the simulation the project information is also required and is given below:

9.5 Project Definition

As stated in the previous chapters, the project definition consists of the material information and the processing conditions, as detailed below:

9.5.1 Material Information

The material information relates to the material name, material grade, material rheology data, and thermodynamic properties of the melt and the solid. In this case the material used is the same as in Chapter 8, and the material properties have been defined there.

9.5.2 Processing Conditions

The processing conditions, as far as the melt and die temperatures are concerned, are the same as before—namely, the melt temperature and the die temperature are set at 220 °C—and the material output is varied as stated in Table 9.4.

9.6 Simulation

After running the software with all the information of the die geometry and the project definition, the software gives the results of the melt flow characteristics through the die, as seen in the previous chapters. In this case, the die geometry of the ⌀315 mm × 26 SDR pipes die and the project definition from above are put into the software first, because this is the largest diameter pipes die in the range with the thinnest wall thickness. Once satisfactory results for this size of the die are achieved, very little modifications to the other sizes will be required to get good results. Therefore, the full results for this size of the die are listed below and only variations in the results for other selected sizes are given.

9.6.1 Simulation Results of ⌀315 mm × 26 SDR Die

The simulation results of the die are given below for the whole die and the three separate sections of the die (i.e., feed section, distribution or spiral section, and tooling or section above the spirals to the die exit):

9.6.1.1 Feed Section

The feed section of the die is common to all sizes of the die for pipe sizes of ⌀140 mm × 17 SDR to ⌀315 mm × 26 SDR, as shown in Table 9.4. The feed section, as shown in Figure 9.3, is divided into three sections: the straight section between the extruder and the die, the intermediary 8 branches of ⌀25.00 mm, and the final parts of the branches of ⌀18.00 mm connecting to the spirals. The dimensions of all these parts are listed in Table 9.6. The results of the simulation of the melt flow characteristics are shown in Table 9.14.

Table 9.14 Simulation Results of Variables in the Feed Section (⌀315 mm × 26 SDR)

Section #	Δp [MPa]	ΔP [MPa]	T [°C]	Shear rate [s^{-1}]	Shear stress [kPa]	Velocity [mm/s]
1	0.67047	19.9726	220.49	10.02	57.42	50.72
2	2.43847	19.3021	222.26	15.71	65.97	33.77
3	0.61274	16.8636	222.69	49.78	91.83	70.45

The first column in Table 9.14 is the section number; Δp is the pressure drop in the section; ΔP is the total pressure drop in the die; T is the temperature at the end of each section; the fifth column is the shear rate at the wall of each section; the sixth column is the shear stress in each section; and the last column is the average velocity of the melt in each section.

From the results in Table 9.14 it can be concluded that the pressure drop in the first section is 0.67047 MPa and the overall pressure drop through the die from the extruder end to the die exit is 19.9726 MPa, which is just under the 20 MPa desired for a stable die. The temperature change through the straight section is very small. The shear rate through the first section is 10.02 s^{-1} and the minimum requirement to avoid material stagnation is 8 s^{-1}. The shear stress of 57.42 kPa in this section is within the desired limits, above 30 kPa and below 140 kPa. Finally, the velocity is 50.72 mm/s, showing that the material is moving at a steady rate. The 8 branches of 25.00 mm in diameter of the second section have a combined pressure drop of 2.43847 MPa and the total pressure drop from the beginning of the split of the branches to the die exit is 19.3021 MPa. As the melt is being pushed through 8 branches of smaller diameters, the temperature rise is 1.77 °C. There are slight changes in shear rate and shear stress through this section, but nothing of great significance. Finally, the velocity in this section is lower than in the previous section, because the combined cross section area of the 8 branches is about 1.39 times larger than the cross section area of the previous section.

The last section is the end of the 8 branches, which connects to the spirals. The diameter of these branches is reduced to match with the width of the spirals. As a result, there are some changes in the melt characteristics in this part of the feed

section. The combined pressure drop in the 8 branches of this section is 0.61247 MPa and the pressure drop from the beginning of this section to the die exit is 16.8636 MPa. Other slight changes in temperature, shear rate, shear stress, and velocity are self-explanatory.

It has been said that this section is common to all the die variations for the different sizes of the pipes, but there will be changes in the results of the melt characteristics for each size of tooling. Therefore, this section, for all the selected sizes of the pipes, will be repeated again and again to show these differences.

9.6.1.2 Distribution Section or Spiral Mandrel

This die for pipes of ⌀140 mm × 11 SDR–⌀315 mm × 26 SDR, as described above, has 8 ports feeding 8 spirals and each spiral is making a full turn around the circumference. In other words, the die has 8 starts and 8 overlaps. Important data extracted from the simulation results in the distribution section is listed below with explanatory notes.

- Pressure drop: The pressure drop from the beginning of the spirals through the rest of the die is the same as at the end of the feed section shown above, which is 16.25 MPa, and at the end of the spirals it is 2.34 MPa, which is the pressure drop through the section after the spirals part of the mandrel to the die exit.
- Temperature change: The temperature at the beginning of the spirals is the same as at the end of the feed section, which is 222.69 °C, and at the end of the spirals it is 224.02 °C. This change in temperature is obviously due to the movement of the melt through the spirals and over the spirals.
- Shear rate: The shear rate at the end of the feed section, from above, was 49.78 s^{-1}; and as the melt enters the spirals the shear rate drops slightly, due to the melt finding more room in the spirals than in the tubes feeding the spirals. As the spirals are getting shallower toward the end and more and more melt is being squeezed into the gap above the spirals, the shear rate in the channels is decreasing and the shear rate in the gap above the channels is increasing. The shear rate at the beginning of the spirals is 25.25 s^{-1} and it peaks at about 1/3 of the mandrel length at 33.70 s^{-1}, and it finally drops to 1 s^{-1} at the end of the spirals. The shear rate in the body starts from 1 s^{-1}, because there is no melt in the body and all the melt is in the spirals. It peaks at 82.23 s^{-1}, halfway in the body, and drops to 33.72 s^{-1} at the end of the spirals. Figure 9.12 and Figure 9.13 clarify the variations of shear rate in the spirals and above the spirals. The minimum required value of shear rate was stated above as 8 s^{-1}. The average shear rate, being above 30 s^{-1}, is enough to avoid any stagnation in this area.
- Shear stress: The shear stress in all areas of the die is very important, because it is the shear stress what causes the rubbing effect on the die, on one hand, and on the other hand a high shear stress causes melt fracture. The minimum value for

design purposes is 30 kPa and the maximum 140 kPa. The shear stress at the beginning of the spirals is about 77 kPa inside the channel and it peaks at 107.4 kPa at the middle of the mandrel above the spirals. Any fluctuations in between the start and the end of the spirals are not important as long as the values are within the limits. The variations of the shear stress inside and above the channel are shown in Figure 9.14 and Figure 9.15.

It should be noted that the pattern of shear rates and shear stresses are similar.

- Melt flow: In the spiral section of the mandrel the melt stream is divided into two parts, one flowing in the direction of the spiral and the other is leakage from the spirals. This is demonstrated in Figure 9.16.

  The most important observation is the shape of the curves. As it can be seen from Figure 9.16, the melt flow in the channel direction is decreasing to the zero value at the end of the spiral. On the other hand, the melt leakage from the channels starts with an almost zero value, peaks in the middle, and diminishes in the main direction at the end of the spirals. If the peak of this curve is to the left, it means that the melt is leaking too early out of the channels, which is caused by the excessive gap between the body and the mandrel at the end of the spirals. The result of this would be poor melt distribution around the circumference of the mandrel. Alternatively, if the peak of the curve is more to the right, it means that the leakage from the spiral is late due to an insufficient gap between the body and the mandrel at the end of the spirals. This would cause a high pressure drop in the mandrel and the rest of the system, which could make the die unstable. Therefore, it is important to balance the melt leakage in such a way that the peak of melt leakage is as close to the middle of the mandrel as possible.
- Flow rate at mandrel exit: Another parameter of melt flow is the melt distribution around the mandrel at the end of the spirals. The average flow rate at the end of the mandrel is 1.7927 cm^3/s with a variation of ± 1.71 %. The maximum limit of this variation is ± 4 % for a good die design. Therefore, this die has a good melt distribution at the end of the spirals.
- Total pressure drop on the mandrel: 13.91 MPa.

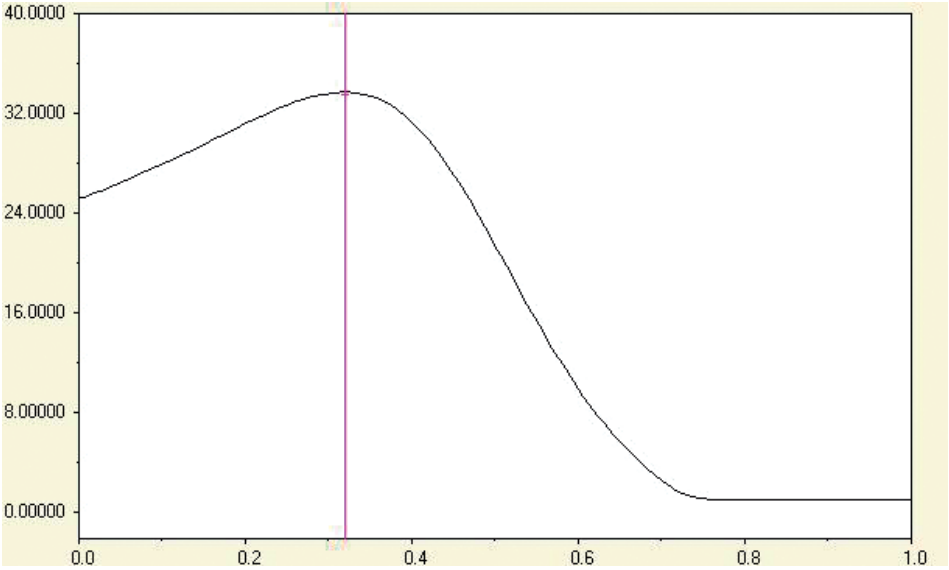

Figure 9.12 Shear rate inside the channels

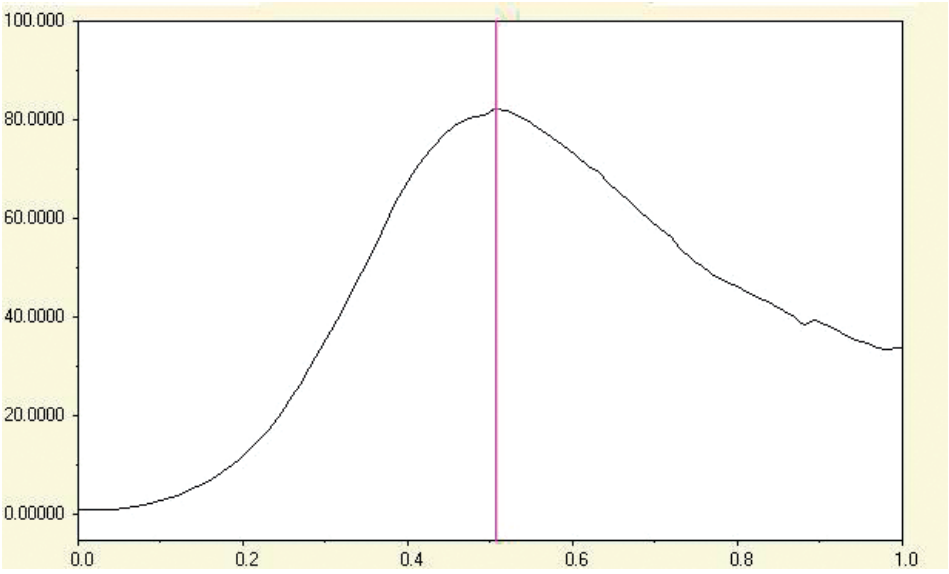

Figure 9.13 Shear rate above the channels

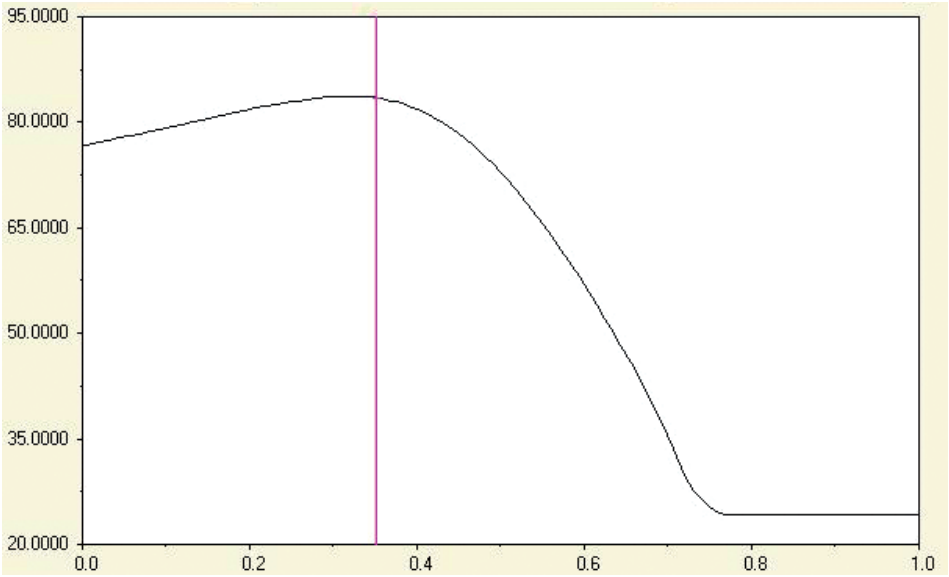

Figure 9.14 Shear stress inside the channels

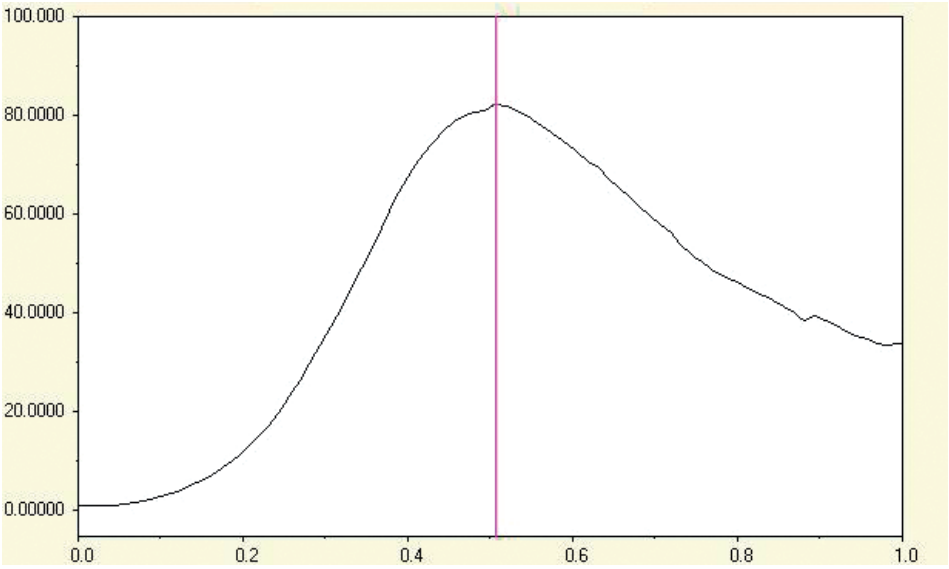

Figure 9.15 Shear stress above the channels

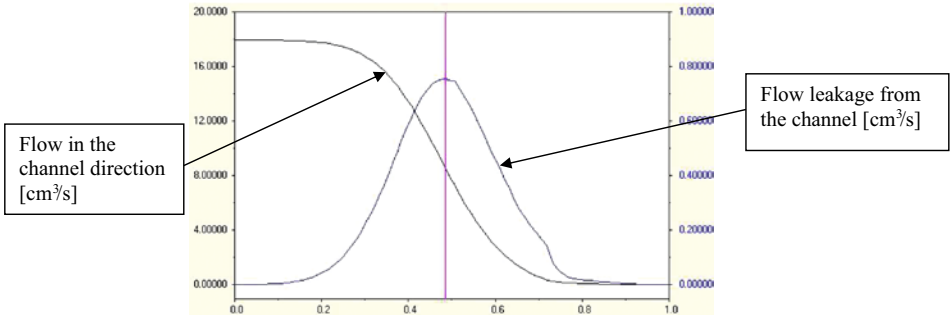

Figure 9.16 Melt flow profile from the channel

The above figures (Figure 9.12–Figure 9.16) represent the true pictures of the melt flow in the spiral mandrel as they have been taken from the simulation software. The total pressure drop through the spirals is the difference of pressure drop in the feed section and the pressure drop from the end of spirals to the die exit. Therefore, the pressure drop through this section is 13.91 MPa.

9.6.1.3 Section Past the Spirals or Tooling Section

The third part of the die is all the sections past the spirals on the mandrel. As shown in Figure 9.6 to Figure 9.11, the first three sections are common to all sizes of the pipes and the last two sections vary according to the size of the pipe to be made. For the purposes of the simulation, the dimensions of all the sections have been defined in Table 9.8 to Table 9.13. The processing conditions for the whole die have been also stated above; and the output is the only parameter that changes with the size of the pipe die to be simulated, and it is already given in Table 9.4. The simulation results of the melt characteristics through the section past the spirals for the ⌀315 mm × 26 SDR pipe die are shown in Table 9.15.

Table 9.15 Simulation Results of Variables in the Section Past the Spirals (⌀315 mm × 26 SDR)

Section #	ΔP [MPa]	q [cm³/s]	T [°C]	Shear rate [s⁻¹]	Shear stress [kPa]
Start #1	2.34	1.83	224.09	35.02	84.55
Start #2	2.17	1.81	223.96	1.36	27.49
Start #3	2.07	1.79	223.90	1.00	24.28
Start #4	2.01	1.79	223.35	1.11	25.32
Start #5	1.39	1.79	223.27	5.50	46.49

In Table 9.15 (as explained before in Chapter 8), ΔP [MPa] is the pressure drop at the beginning of each section, q [cm³/s] is the volumetric flow at the beginning of

the section, T [°C] is the temperature at the beginning of the section, and the last two columns are the shear rate [s^{-1}] and the shear stress [kPa] at the beginning of each section.

- Pressure drop through the part above the spirals: 2.34 MPa (which is obviously 0.00 at the die exit)
- Total pressure drop through the whole die: 19.973 MPa
- Final volumetric flow rate: 1.793 cm^3/s with a variation of ± 0.05 % at the die exit

The above results show that the melt flow through the die in all sections is satisfactory. The same exercise has been repeated for all the selected pipe sizes. The repetition of the same text again would be superfluous; therefore, the end results for each size of the pipe are listed below.

9.6.2 Simulation Results of ⌀315 mm × 17 SDR Die

By changing the tooling for the ⌀315 mm × 17 SDR pipes, as shown in Figure 9.7, in the above die head and changing the material output to 450 kg/h in the simulation software, the following results are observed:

9.6.2.1 Feed Section

Table 9.16 Simulation Results of Variables in the Feed Section (⌀315 mm × 17 SDR)

Section #	△p [MPa]	△P [MPa]	T [°C]	Shear rate [s^{-1}]	Shear stress [kPa]	Velocity [mm/s]
1	0.686	19.744	220.50	10.77	58.76	54.345
2	2.493	19.058	222.31	16.89	67.44	36.177
3	0.625	16.565	222.75	53.49	93.67	75.479

9.6.2.2 Distribution Section or Spiral Mandrel

- Pressure drop:
  - At the beginning = 15.94 MPa
  - At the end = 1.725 MPa
- Temperature change:
  - At the beginning = 222.75 °C
  - At the end = 223.42 °C
- Shear rate:
  - At the beginning in the mandrel = 27.09 s^{-1}
  - At the end on the body = 36.13 s^{-1}

- Shear stress:
  - At 1/3 height of the mandrel = 85.39 kPa
  - At halfway on the body = 109.65 kPa max.
- Melt flow: The melt flow pattern is the same as shown in Figure 9.16.
- Flow rate at mandrel exit: The average flow rate at the end of the mandrel is 1.7907 cm^3/s with a variation of ± 1.72 %.
- Total pressure drop on the mandrel: 14.215 MPa.

9.6.2.3 Section Past the Spirals or Tooling Section

As the geometry of this section has been changed, the maximum difference in the melt flow characteristics will be seen here, as follows:

Table 9.17 Simulation Results of Variables in the Section Past the Spirals (⌀315 mm × 17 SDR)

Section #	ΔP [MPa]	q [cm^3/s]	T [°C]	Shear rate [s^{-1}]	Shear stress [kPa]
Start #1	1.7235	1.9591	224.29	37.603	86.290
Start #2	1.5524	1.9357	224.16	1.4593	28.270
Start #3	1.4445	1.9216	224.09	1.0000	24.283
Start #4	1.3834	1.9206	223.73	1.0000	24.280
Start #5	1.0495	1.9211	223.41	2.5269	34.972

- Pressure drop through the part above the spirals: 1.7235 MPa (which is obviously 0.00 at the die exit)
- Total pressure drop through the whole die: 19.743 MPa
- Final volumetric flow rate: 1.921 cm^3/s with a variation of ± 0.02 % at the die exit

9.6.3 Simulation Results of ⌀250 mm × 17 SDR Die

By changing the tooling for the ⌀250 mm × 17 SDR pipes, as shown in Figure 9.8, in the above die head and changing the material output to 420 kg/h in the simulation software, the following results are observed:

9.6.3.1 Feed Section

Table 9.18 Simulation Results of Variables in the Feed Section (Ø250 mm × 17 SDR)

Section #	ΔP [MPa]	ΔP [MPa]	T [°C]	Shear rate [s^{-1}]	Shear stress [kPa]	Velocity [mm/s]
1	0.670	19.802	220.49	10.02	57.42	50.722
2	2.439	19.152	222.26	15.71	65.97	33.76
3	0.625	16.713	222.69	49.79	91.83	70.45

9.6.3.2 Distribution Section or Spiral Mandrel

- Pressure drop:
  - At the beginning = 15.94 MPa
  - At the end = 1.936 MPa
- Temperature change:
  - At the beginning = 222.78 °C
  - At the end = 223.77 °C
- Shear rate:
  - At the beginning in the mandrel = 27.09 s^{-1}
  - At the end on the body = 36.21 s^{-1}
- Shear stress:
  - At 1/3 height of the mandrel = 85.39 kPa
  - At halfway on the body = 109.65 kPa max.
- Melt flow: The melt flow pattern is the same as shown in Figure 9.16.
- Flow rate at mandrel exit: The average flow rate at the end of the mandrel is 1.9207 cm^3/s with a variation of ± 1.72 %.
- Total pressure drop on mandrel: 14.00 MPa.

9.6.3.3 Section Past the Spirals or Tooling Section

As the geometry of this section has been changed, the maximum difference in the melt flow characteristics will be seen here, as follows:

Table 9.19 Simulation Results of Variables in the Section Past the Spirals (Ø250 mm × 17 SDR)

Section #	ΔP [MPa]	q [cm^3/s]	T [°C]	Shear rate [s^{-1}]	Shear stress [kPa]
Start #1	2.1698	1.8282	224.09	35.018	84.546
Start #2	2.0005	1.8067	223.96	1.3597	27.487
Start #3	1.8956	1.7935	223.90	1.0000	24.282

Table 9.19 Simulation Results of Variables in the Section Past the Spirals (⌀250 mm × 17 SDR) *(continued)*

Section #	ΔP [MPa]	q [cm^3/s]	T [°C]	Shear rate [s^{-1}]	Shear stress [kPa]
Start #4	1.8386	1.7934	223.48	1.1112	25.342
Start #5	1.3291	1.7942	223.46	4.7961	44.283

- Pressure drop through the part above the spirals: 2.1698 MPa (which is obviously 0.00 at the die exit)
- Total pressure drop through the whole die: 19.802 MPa
- Final volumetric flow rate: 1.793 cm^3/s with a variation of ± 0.07 % at the die exit

9.6.4 Simulation Results of ⌀140 mm × 17 SDR Die

By changing the tooling for the ⌀140 mm × 17 SDR pipes, as shown in Figure 9.9, in the above die head and changing the material output to 340 kg/h in the simulation software, the following results are observed:

9.6.4.1 Feed Section

Table 9.20 Simulation Results of Variables in the Feed Section (⌀140 mm × 17 SDR)

Section #	Δp [MPa]	ΔP [MPa]	T [°C]	Shear rate [s^{-1}]	Shear stress [kPa]	Velocity [mm/s]
1	0.624	19.895	220.46	8.018	53.426	41.061
2	2.277	19.271	222.10	12.59	61.60	27.33
3	0.576	16.994	222.69	49.79	91.83	70.45

9.6.4.2 Distribution Section or Spiral Mandrel

- Pressure drop:
  - At the beginning = 16.418 MPa
  - At the end = 3.410 MPa
- Temperature change:
  - At the beginning = 220.00 °C
  - At the end = 223.51 °C
- Shear rate:
  - At the beginning in the mandrel = 20.34 s^{-1}
  - At the end on the body = 27.10 s^{-1}

- Shear stress:
  - At 1/3 height of the mandrel = 78.21 kPa
  - At halfway on the body = 100.897 kPa max.
- Melt flow: The melt flow pattern is the same as shown in Figure 9.16.
- Flow rate at mandrel exit: The average flow rate at the end of the mandrel is 1.4512 cm^3/s with a variation of ± 1.66 %.
- Total pressure drop on mandrel: 13.08 MPa.

9.6.4.3 Section Past the Spirals or Tooling Section

As the geometry of this section has been changed, the maximum difference in the melt flow characteristics will be seen here, as follows:

Table 9.21 Simulation Results of Variables in the Section Past the Spirals (⌀140 mm × 17 SDR)

Section #	ΔP [MPa]	q [cm^3/s]	T [°C]	Shear rate [s^{-1}]	Shear stress [kPa]
Start #1	3.4124	1.4793	223.51	28.156	79.325
Start #2	3.2536	1.4621	223.38	1.0946	25.187
Start #3	3.1575	1.4517	223.38	1.0000	24.277
Start #4	3.1114	1.4513	222.94	1.4112	27.892
Start #5	2.2332	1.4519	223.75	22.985	74.550

- Pressure drop through the part above the spirals: 3.4124 MPa (which is obviously 0.00 at the die exit)
- Total pressure drop through the whole die: 19.895 MPa
- Final volumetric flow rate: 1.4512 cm^3/s with a variation of ±0.04 % at the die exit

9.6.5 Simulation Results of ⌀225 mm × 11 SDR Die

By changing the tooling for the ⌀225 mm × 11 SDR pipes, as shown in Figure 9.10, in the above die head and changing the material output to 400 kg/h in the simulation software, the following results are observed:

9.6.5.1 Feed Section

Table 9.22 Simulation Results of Variables in the Feed Section (⌀225 mm × 11 SDR)

Section #	Δp [MPa]	ΔP [MPa]	T [°C]	Shear rate [s^{-1}]	Shear stress [kPa]	Velocity [mm/s]
1	0.660	19.728	220.48	9.51	56.46	48.31
2	2.40	19.07	222.22	14.93	64.94	32.16
3	0.604	16.668	222.65	47.32	90.54	67.09

9.6.5.2 Distribution Section or Spiral Mandrel

- Pressure drop:
  - At the beginning = 16.064 MPa
  - At the end = 2.363 MPa
- Temperature change:
  - At the beginning = 220.00 °C
  - At the end = 223.94 °C
- Shear rate:
  - At the beginning in the mandrel = 24.02 s^{-1}
  - At the end on the body = 31.82 s^{-1}
- Shear stress:
  - At 1/3 height of the mandrel = 82.10 kPa
  - At halfway on the body = 105.795 kPa max.
- Melt flow: The melt flow pattern is the same as shown in Figure 9.16.
- Flow rate at mandrel exit: The average flow rate at the end of the mandrel is 1.7073 cm^3/s with a variation of ± 1.70 %.
- Total pressure drop on mandrel: 13.70 MPa.

9.6.5.3 Section Past the Spirals or Tooling Section

As the geometry of this section has been changed, the maximum difference in the melt flow characteristics will be seen here, as follows:

Table 9.23 Simulation Results of Variables in the Section Past the Spirals (⌀225 mm × 11 SDR)

Section #	ΔP [MPa]	q [cm^3/s]	T [°C]	Shear rate [s^{-1}]	Shear stress [kPa]
Start #1	2.3656	1.7026	223.85	28.00	74.7462
Start #2	3.2536	1.7067	223.72	1.00	24.25
Start #3	3.1575	1.7072	223.68	1.176	25.876
Start #4	3.1114	1.7070	223.26	6.29	48.745
Start #5	2.2332	1.7070	223.39	6.29	48.745

- Pressure drop through the part above the spirals: 2.364 MPa (which is obviously 0.00 at the die exit)
- Total pressure drop through the whole die: 19.728 MPa
- Final volumetric flow rate: 1.7073 cm^3/s with a variation of ±0.08 % at the die exit

It is worth mentioning here that the shear rate and the shear stress in sections #2 and #3 are below the standard; but, the averages being well above the minimum requirements for a smooth flow of the melt, there should not be any problem.

A small drop in the temperature of the die heater would correct the shear rate and shear stress in these regions.

9.6.6 Simulation Results of ⌀140 mm × 11 SDR Die

By changing the tooling for the ⌀140 mm × 11 SDR pipes, as shown in Figure 9.11, in the above die head and changing the material output to 370 kg/h in the simulation software, the following results are observed:

9.6.6.1 Feed Section

Table 9.24 Simulation Results of Variables in the Feed Section (⌀140 mm × 11 SDR)

Section #	△p [MPa]	△P [MPa]	T [°C]	Shear rate [s^{-1}]	Shear stress [kPa]	Velocity [mm/s]
1	0.642	19.847	220.47	8.762	54.991	44.684
2	2.341	19.205	222.16	13.759	63.327	29.745
3	0.591	16.864	222.58	43.581	88.483	62.061

9.6.6.2 Distribution Section or Spiral Mandrel

- Pressure drop:
  - At the beginning = 16.273 MPa
  - At the end = 2.908 MPa
- Temperature change:
  - At the beginning = 220.00 °C
  - At the end = 223.73 °C
- Shear rate:
  - At the beginning in the mandrel = 22.18 s^{-1}
  - At the end on the body = 29.55 s^{-1}
- Shear stress:
  - At 1/3 height of the mandrel = 80.52 kPa
  - At halfway on the body = 103.33 kPa max.
- Melt flow: The melt flow pattern is the same as shown in Figure 9.16.
- Flow rate at mandrel exit: The average flow rate at the end of the mandrel is 1.5793 cm^3/s with a variation of ± 1.68%.
- Total pressure drop on mandrel: 13.36 MPa.

9.6.6.3 Section Past the Spirals or Tooling Section

As the geometry of this section has been changed, the maximum difference in the melt flow characteristics will be seen here, as follows:

Table 9.25 Simulation Results of Variables in the Section Past the Spirals (⌀140 mm × 11 SDR)

Section #	ΔP [MPa]	q [cm^3/s]	T [°C]	Shear rate [s^{-1}]	Shear stress [kPa]
Start #1	2.9109	1.6101	223.74	30.72	81.391
Start #2	2.7479	1.5914	223.61	1.1939	26.089
Start #3	2.6483	1.5800	223.58	1.0000	24.279
Start #4	2.5981	1.5800	223.21	1.3689	27.56
Start #5	1.9071	1.2514	223.86	13.900	63.608

- Pressure drop through the part above the spirals: 2.909 MPa (which is obviously 0.00 at the die exit)
- Total pressure drop through the whole die: 19.847 MPa
- Final volumetric flow rate: 1.5793 cm^3/s with a variation of ±0.11% at the die exit

It is worth mentioning here that the shear rate and the shear stress in sections #2 and #3 are below the standard; but, the averages being well above the minimum requirements for a smooth flow of the melt, there should not be any problem. A small drop in the temperature of the die heater would correct the shear rate and shear stress in these regions and also would improve the finish on the end product.

The above are results of the simulation of typically 6 dies chosen out of the range of 14 different sizes of pipe diameters and wall thicknesses corresponding to pressure ratings. It can be seen that the results vary very slightly from one die to the other, but the overall results for all the chosen dies are within the prescribed limits of all the parameters. Just as a reminder, the set limits for these parameters are as follows:

- Maximum pressure drop: 20 MPa
- Minimum wall shear rate: 8 s^{-1}
- Maximum wall shear stress: 140 kPa
- Volumetric flow rate variation: ±4%

The values obtained from the simulation results in all six dies listed above are within these limits. In certain places a shear rate below 8 s^{-1} has been noticed, but the average shear rate in each part of the die has been above this limit. The major effect of the low shear rate is a slow movement of the melt through that section, which would result in a high residence time and degradation. Materials like HDPE can withstand longer residence times than many other polymers. A high shear

stress causes shark skin effect on the final product and the maximum limit for shark skin is 140 kPa. In the results above, the values of shear stress in all parts of the dies have been well below this limit. Similarly, a high pressure drop results in instability of the die and in all cases the values of pressure drop have been kept below this limit by adjusting the output to suit, yet obtaining the maximum output from the die. The maximum temperature variation seen from the results is of about 3 °C in some parts of the dies and for materials like HDPE, which has a large window of processing temperatures, this kind of variation is of no consequence. As shown in Figure 9.16, the volumetric flow in the channel direction and the leakage over the channel are evenly distributed around the middle of the mandrel. It means that the material leakage from the spirals is neither too early nor too late. As stated previously, an early leakage of melt from the spirals increases the potential of a long residence time, resulting in degradation, and a late leakage of melt from the spirals increases the pressure drop in the die.

Finally, the volumetric flow rate variation from the spirals and at the die exit has been well below the limit of ± 4 %. As seen from the above simulation results, the resultant values have been satisfactory for the chosen dies. The results of other dies are similar for the levels of output given in Table 9.4; therefore, they have not been published here. Any engineer experienced in the design of dies for manufacturing pipes should be able to design complete dies for all the sizes given above. As mentioned above, sections 1 and 2 of the die, as shown in Figure 9.3 and Figure 9.4, are common to all the dies. The third section of tooling varies in each case according to the size of the pipe. The dimensions of the land section of each size of the pipe are given in Table 9.4. The complete dies for pipes of ⌀315 mm × 17 SDR and ⌀140 mm × 17 SDR are shown in Figure 9.1 and Figure 9.2, respectively.

10 Coextrusion Pipe Dies

So far only monolayer dies for pipes and tubes have been illustrated. There are times when pipes or tubes made from a single polymer do not meet the requirements of the application. In such cases, other materials are combined to make a multilayer product to achieve the required properties for the desired function of the product. This type of arrangement is used not only on pipes and tubes but several other extruded products, such as:

- Flat sheets
- Blown film
- Profiles
- Cables, and many more.

Two methods of combining two or more materials into multilayer products will be discussed in the following text:

1. Extruded separately and then combined
2. Extruded together from one die

10.1 Extruded Separately and Then Combined

In the first case, the product is first extruded as a finished or semi-finished product and then it is passed through a crosshead die to lay a second layer of a different polymer on it. In the case of a semi-finished product, the product is partially cooled and another extruder or extruders and a crosshead die or dies are placed downstream to lay one or more layers on it. For the first part of the product, monolayer dies are used; the designs of several such dies have been illustrated in the previous chapters. For the subsequent layering of one or more layers, crosshead dies are used; the design of such dies will be explained in detail later in this chapter. If the

crosshead die is made for more than one layer, then it follows the design criteria of a coextrusion side-fed die, which will also be explained later in this chapter.

Normally, this practice of laying the second layer on a pre-extruded prime layer is used for laying a very thin layer on the main layer of the pipe or tube, and this process is also termed sheathing. Sheathing has been used for multilayer cables very commonly and it is only used for pipes made for a specific purpose; one example is HDPE pipes for water and gas. As it is a well-known fact that HDPE is a notch sensitive material, in many instances HDPE water and gas pipes, which are buried in ground, rupture due to notches created in the pipes by the movement of the soil and sharp pebbles in the soil digging into the pipe. In recent years, the sheathing of HDPE pipes with a thin layer of polypropylene has become a common practice among the manufacturers of HDPE pipes for water and gas applications.

Figure 10.1 shows the general arrangement of a Ø90 mm pipe being extruded first and partially cooled; then, a thin layer of polypropylene is pressure coated on the pipe to give a second protective layer. After that, the pipe is passed through further cooling baths and then it goes through the haul-off and cutter in a normal pipe production process. In certain applications, pressure coating is replaced with tubular coating, where a larger-sized second layer is produced and then pulled on to the prime layer of the pipe with vacuum applied in between the two layers. This process is also called jacketing. In this case, the adhesion between the two layers is normally poor and the second layer can be peeled off easily from the main layer where required.

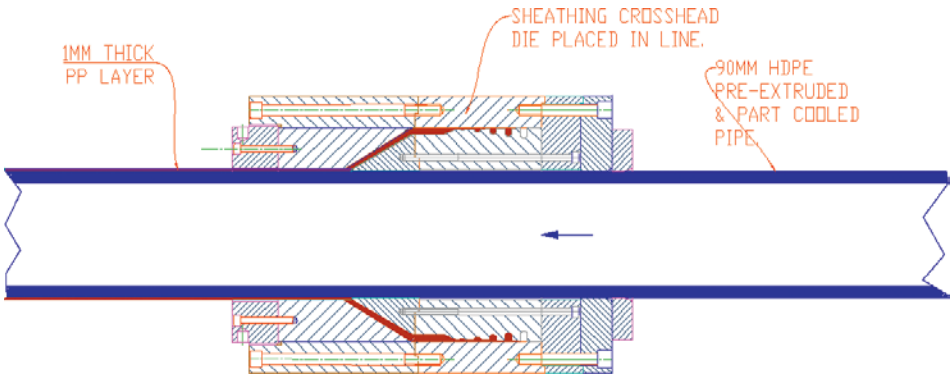

Figure 10.1 Pressure coating of thin layer on pipe

Figure 10.1 shows a typical arrangement for coating a thin layer (approximately 1 mm thick) of polypropylene on a HDPE water pipe.

10.2 Extruded Together from One Die

In the second case, two or more layers are coextruded from the same die head. In a coextrusion die, two or more dies are stacked on each other to distribute different materials separately, which are then brought together in the end part of the die, normally just before the tooling part of the die. In this part of the die, multiple streams of different polymers are combined together. Figure 10.2 shows a typical 2-layer tube die for micro-ducting for fiber optics. The outside layer is HDPE and the inside layer is silicon modified HDPE, which makes the inside layer slightly slippery and smooth to protect the fiber optics from being damaged, when the fiber optics bundles are shot through or pulled through the ducting tube. This die also has a striping arrangement for two more stripes for identification. The striping arrangement will be discussed in some of the later examples.

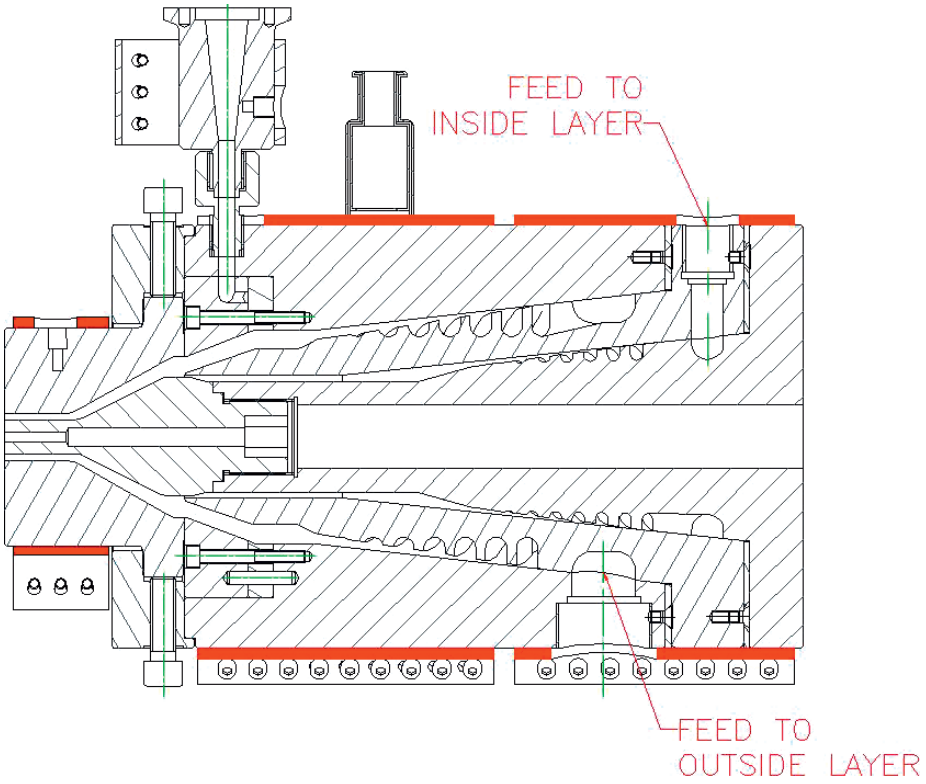

Figure 10.2 Micro-duct 2-layer crosshead die

In this die, the melt from each extruder is distributed around the individual spiral mandrel and then brought together at the end between the die and pin. The ratios

of mass output through each mandrel can be calculated at the design stage easily and each mandrel is designed for the given output separately. When two or more layers are brought together, problems of interface or boundary instabilities are experienced in most cases, depending upon the viscosity differences of the two or more polymers being combined together. This can result in changes of the material properties at the boundary and in one layer influencing the flow of the other layer.

The computation of these instabilities and the adjustment to the design is very complex; therefore, established computer software to predict the flow characteristics of the two or more layers is very helpful for the design of multilayer dies. The trial and error approach can be expensive and time consuming. The exact location of the boundary is not known and it can be guessed from the volumetric flow rates and viscous properties of the individual materials. The software mentioned below eliminates the guess work by showing the boundary between the two layers, as shown below. For the purpose of analyzing the inter-layer instabilities, the software named "Flow 2D" from Compuplast® is used here.

The whole design of the above die is discussed in Chapter 11; how to bring the two layers together is discussed here. The above die is designed for 2-layer tubes of varying diameters from ⌀5.00 mm OD and ⌀3.50 mm ID to ⌀14.00 mm OD and ⌀10.00 mm ID. The layers thicknesses are about 90% of outside layer and 10% inside layer. The outside layer is a specific grade of HDPE and the inside layer is silica modified HDPE with 5–7% silica in it. The die is designed for a high output of 200 kg/h for the largest size, and other sizes in the range are scaled down according to the outside diameter and the wall thickness of each size. The distribution of each melt has been sorted out as is shown in Chapter 11, which gives the full design of the above die. Therefore, the sections of the die where two layers are coming together are dealt with here to show the interface instabilities of the two layers.

This die has been designed for the maximum size of the tubes of diameter 16.00 mm (as shown in Chapter 11), but details of the diameter 14.00 mm are given here. Tubes of diameter 14 mm have an outside diameter of 14 mm and an inside diameter of 10 mm. Table 11.2 in Chapter 11 shows that, using a draw down ratio of 2.56, the wall thickness of the outside layer is 2.90 mm and that of the inside layer is 0.30 mm. The tooling part (i.e., pin and die) is designed with the combined thickness of the two layers; as a result, the die gap is 3.20 mm, as shown in Figure 10.3. Table 11.3 shows that the output for the outside layer of the 14 mm tube is 185 kg/h and the corresponding output for the inside layer is 15.83 kg/h.

Using the above mentioned software for the simulation, the geometry of the section of the die where two or more materials come together is prepared to suit the software. The simulation results of the 2-layer die are shown below.

10.2.1 Simulation of 2-Layer Interface

As mentioned above, the section through which two materials flow together is divided according to the layer thickness ratios, and the geometry of the section is shown in Figure 10.3 as used for the simulation using the software.

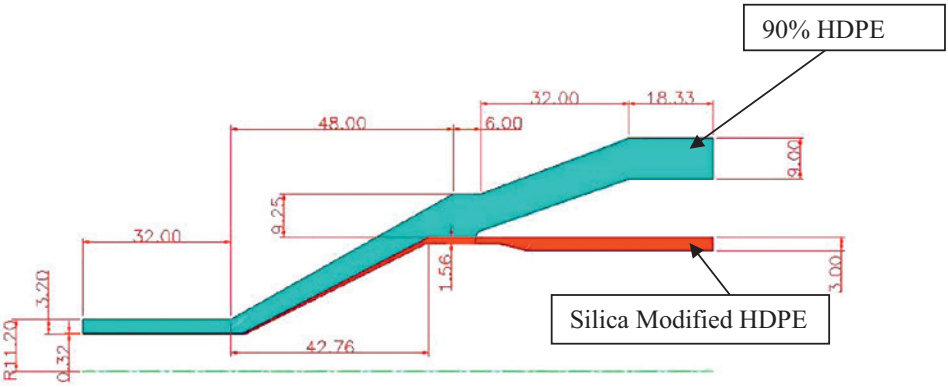

Figure 10.3 Section of die showing two materials flowing together

The geometry information with the materials data and processing conditions are put into the software Flow 2D™, and the results are analyzed. It must be stressed again that the software is used as a calculator for checking the results and changing the parameters to optimize the flow characteristics. First of all, the viscosities of the two materials used for the design of the die are compared as shown in Figure 10.4.

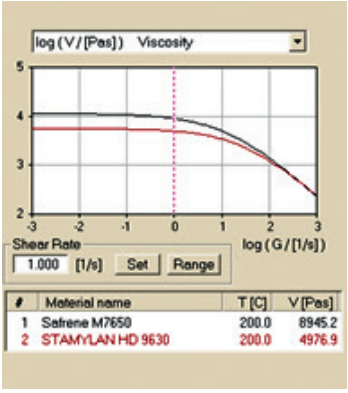

Figure 10.4 Comparison of viscosities

As seen from Figure 10.4, the viscosity of the top layer material HDPE Safrene M7650 at 200 °C is slightly higher than the second layer material Stamylan HD

9630 (7% silicon filled HDPE) at lower shear rates. As the shear rate increases to 100 s^{-1} and above, the viscosities of the two materials get closer. The results of the simulation using Flow 2D™ are shown below. For the purpose of the design, the 4 flow variables analyzed are velocity profile, pressure drop, temperature variation, and shear stress through the sections and near the boundaries.

10.2.1.1 Velocity

The velocity profile is shown in the flow direction firstly as overall values and secondly at the boundary in various places along the axial direction.

10.2.1.1.1 Overall Velocity Profile

Figure 10.5 shows the velocity profile through the tooling section. The color red is the maximum velocity in the inner layer and near the inside wall of the outer layer. The velocity near the outside wall of the outer layer is the minimum velocity, as is shown in the graphs in the next section.

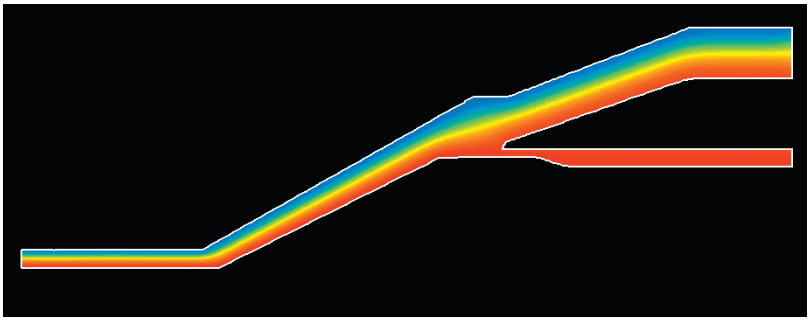

Figure 10.5 Overall velocity profile

10.2.1.1.2 Velocity Profile near the Joining of Two Melt Streams

In Figure 10.6 a cut is made near the joining of the two melt streams, and the velocity profile at this point is shown in Figure 10.7.

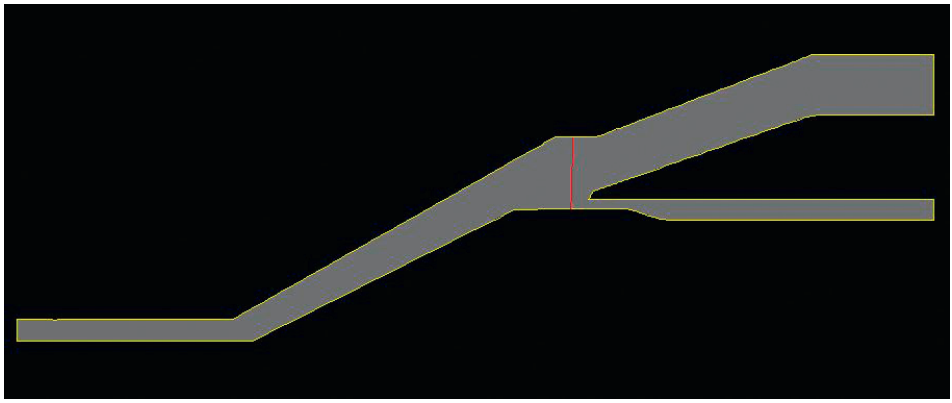

Figure 10.6 Position of cut

Figure 10.7 shows a graph of the velocity profile close to the position of the two melt streams joining together (i.e., HDPE Safrene M7650 on the outside and silicon modified Stamylan HD9630 on the inside). The normal velocity profile in a tube is in the shape of a parabola, which means that the velocity is maximum in the middle and minimum at the walls. In this case, the curve for the inside material is relatively sharp due to the viscosity of the inside layer material being less than the one of the outside material, as shown in Figure 10.4. The values on the X-axis are the position in the section from the inside wall to the outside wall and on the Y-axis is shown the velocity in mm/s.

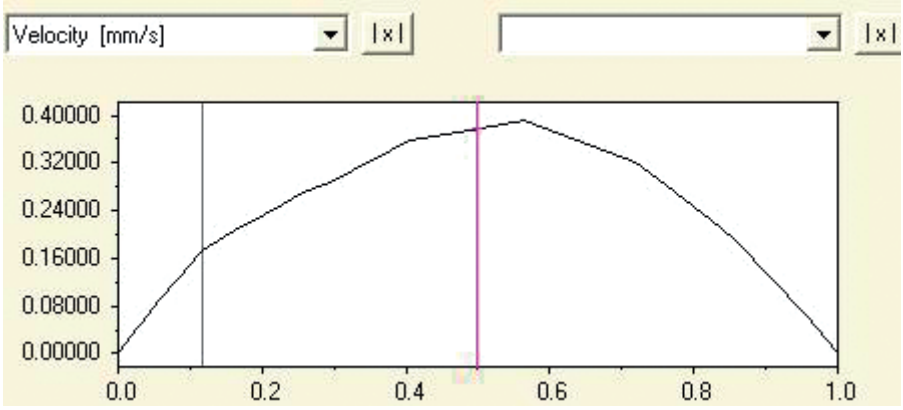

Figure 10.7 Graph of velocity profile near the joining of two melt streams

Figure 10.8 shows a cut across the profile further downstream, and the graph of the velocity profile is shown in Figure 10.9. As the two materials are flowing together the profile curve is getting smoother, which means that with the increase of shear rate the viscosities of the two melt streams are getting closer.

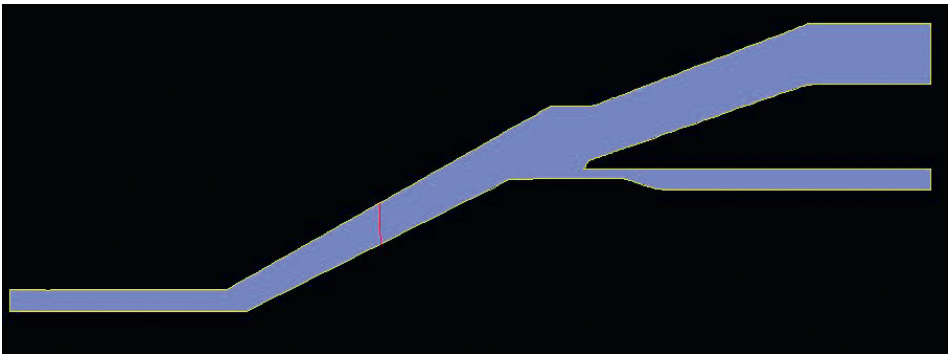

Figure 10.8 Cut across the profile

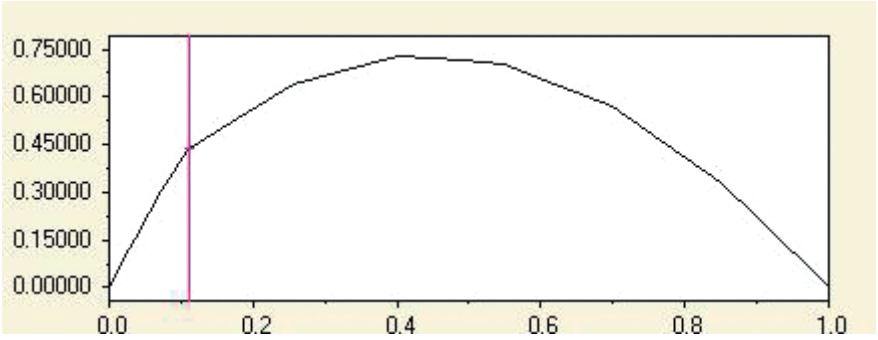

Figure 10.9 Graph of velocity profile of two materials flowing together

Figure 10.10 and Figure 10.11 show the velocity profile near the die exit. As the curve of the inside material is blending into the curve of the outside material, it can be concluded that there are no interface instabilities of the two materials. On the other hand, if there had been a big difference in the shape of the two curves, some corrective action would have been necessary.

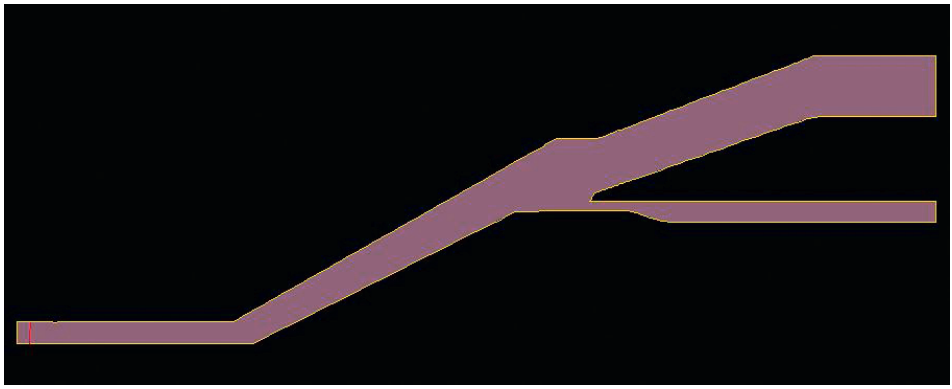

Figure 10.10 Velocity profile of two melt streams

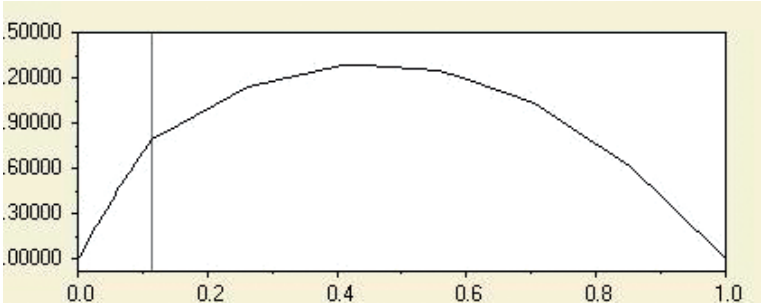

Figure 10.11 Graph of velocity profile of two melts close to die exit

10.2.1.2 Pressure Drop

Pressure is a primary variable calculated during the solution. As has been seen in the previous examples of dies, pressure drops from the maximum at the start of the melt stream to zero at the die exit. As shown in Figure 10.12, the maximum average value of pressure at the beginning of the section is 0.108 MPa and 0.00 at the die exit.

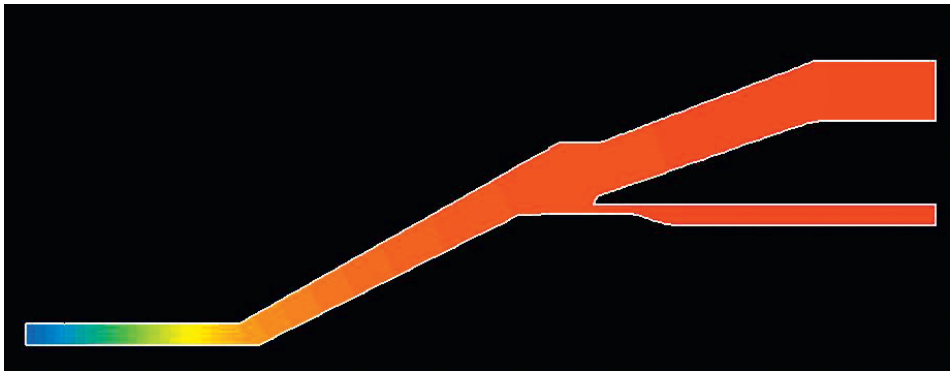

Figure 10.12 Pressure drop downstream

Figure 10.13 shows a line through the outer section, along which the pressure drop of the outer layer is plotted in the graph in Figure 10.14. The total pressure drop through this section is 0.10232 MPa, which is the value at the beginning of the section on the right hand side, and it drops to zero at the die exit, as shown in the graph of pressure drop along the line in Figure 10.14.

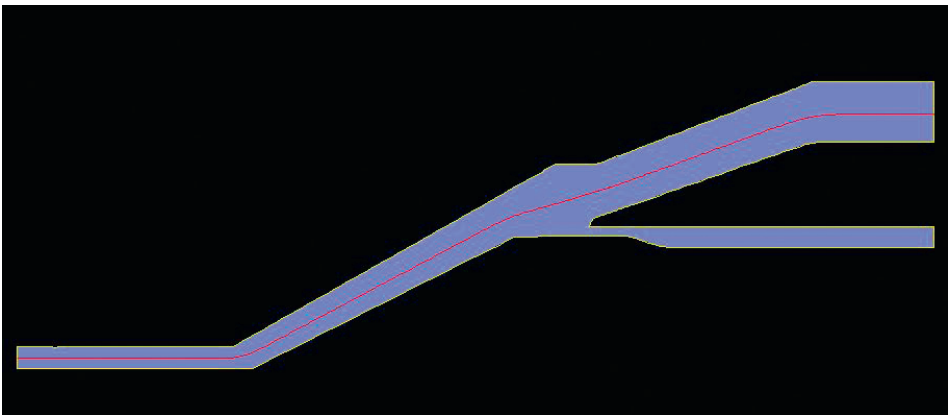

Figure 10.13 Pressure drop through the outer layer

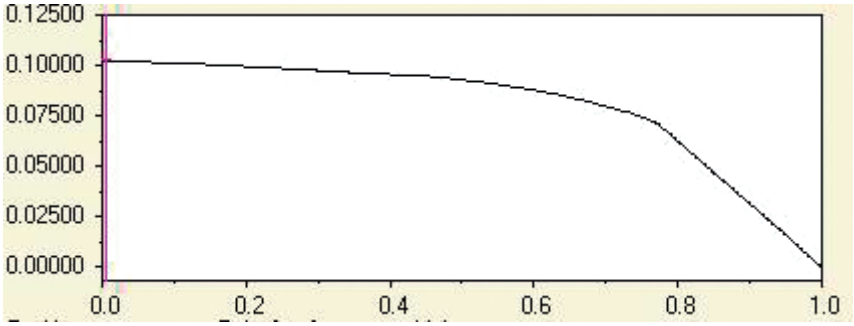

Figure 10.14 Graph of pressure drop through the outer layer

Similarly, Figure 10.15 and Figure 10.16 show the pressure drop along the line in the inner layer. The value of pressure drop through this section is 0.10770 MPa. This is slightly higher than for the outer layer because of the narrow section near the junction of the two melts, and as this melt in the inner layer joins the main stream it equalizes to the outer layer, as shown in Figure 10.15.

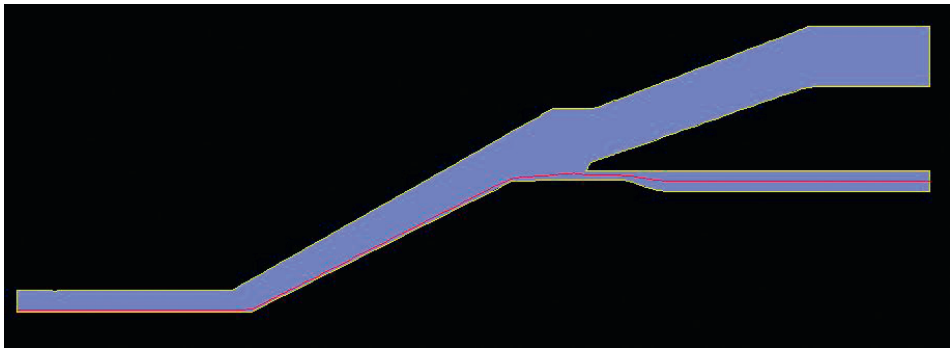

Figure 10.15 Pressure drop through the inner layer

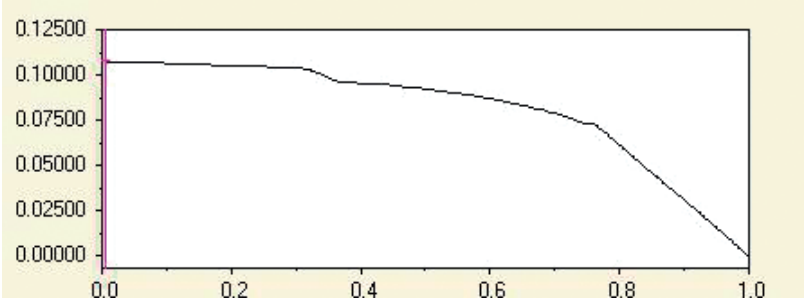

Figure 10.16 Graph of pressure drop through inner layer

10.2.1.3 Temperature

Figure 10.17 shows the temperature variations in the section. The set temperatures for the two melts entering the die and the die body temperature are 200 °C. The blue areas in the section in Figure 10.17 are at 200 °C, and the yellow and red areas are at higher temperatures.

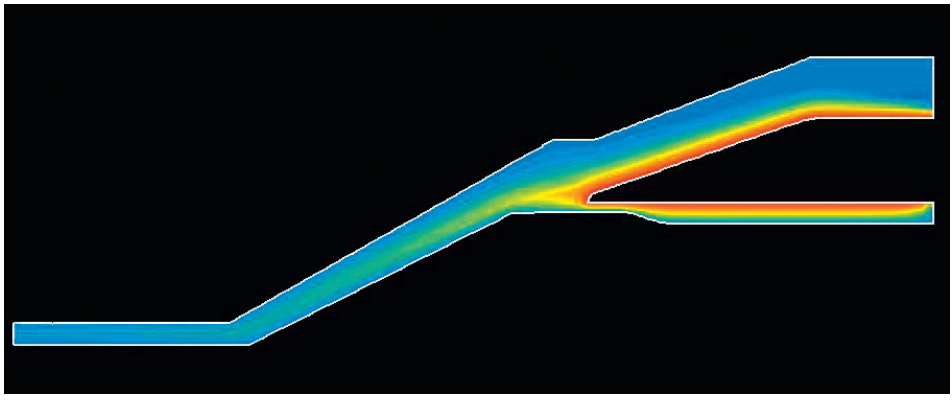

Figure 10.17 Temperature variations through the section

To investigate the extent of the variation in temperature near the wall of the outer layer, a line near the inside wall of the outer layer is drawn as shown in Figure 10.18, and the graph of temperature along this line is plotted in Figure 10.19. It can be seen from the graph that the temperature near the inside wall of the outer layer starts at 208 °C and rises to about 209 °C closer to where the two melt streams meet, and then it drops to 200 °C towards the die exit. For a material like HDPE this variation is not of much concern, since HDPE has a large window of processing temperature.

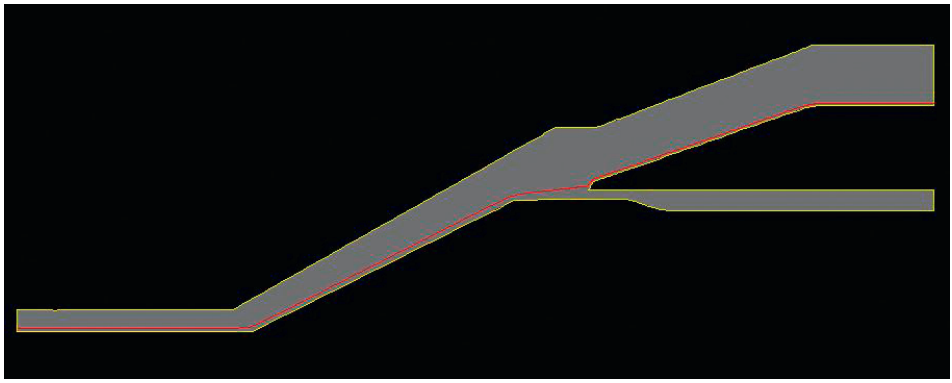

Figure 10.18 Line near the inside of outer layer

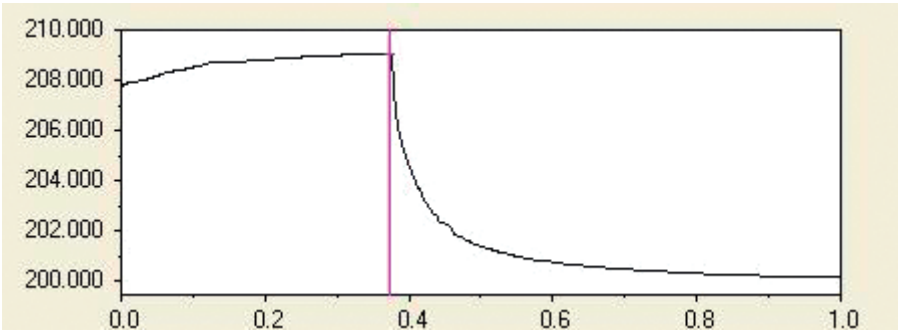

Figure 10.19 Temperature profile along the line in Figure 10.18

10.2.1.4 Shear Stress

The last variable to be checked for the die design is the shear stress. The physical meaning of this variable is that it shows the extent of shear stress generated during the melt flow. The value of shear stress is given in kPa. Figure 10.20 shows that the maximum shear stress is varying from −3.267 kPa to a maximum of 4.095 kPa in the red area of the section, which is in the die land region and closer to the outer

wall of the die. Taking a cut near the die exit as shown in Figure 10.21, the variation is shown in the graph in Figure 10.22, and the minimum value is −3.238 kPa and the maximum 3.76 kPa.

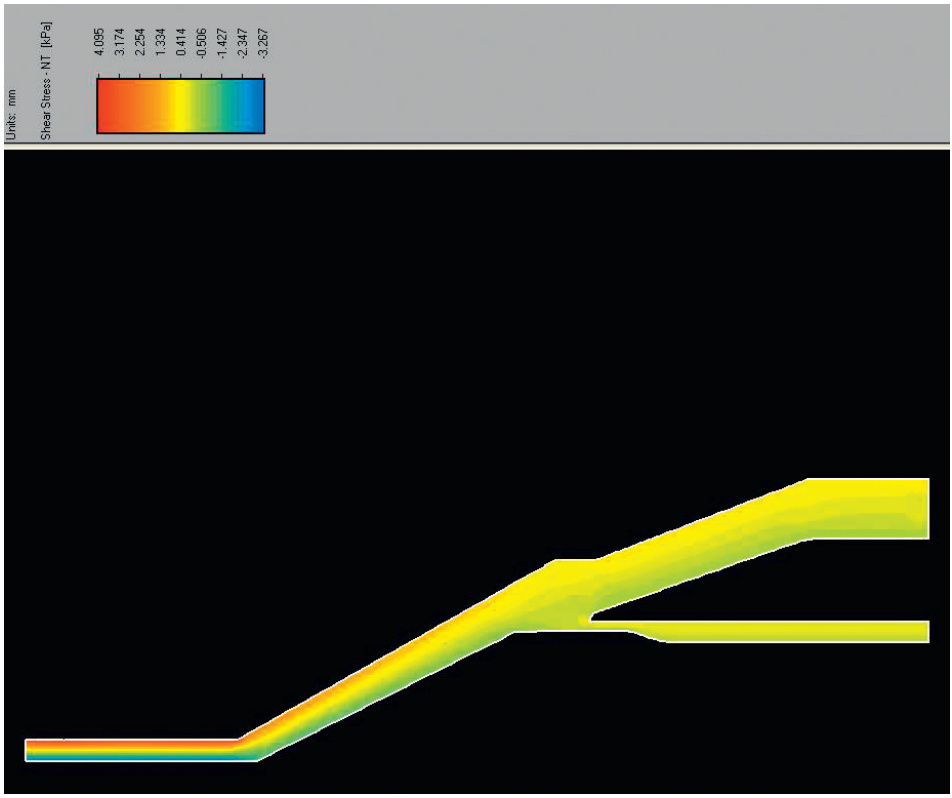

Figure 10.20 Shear stress through the section

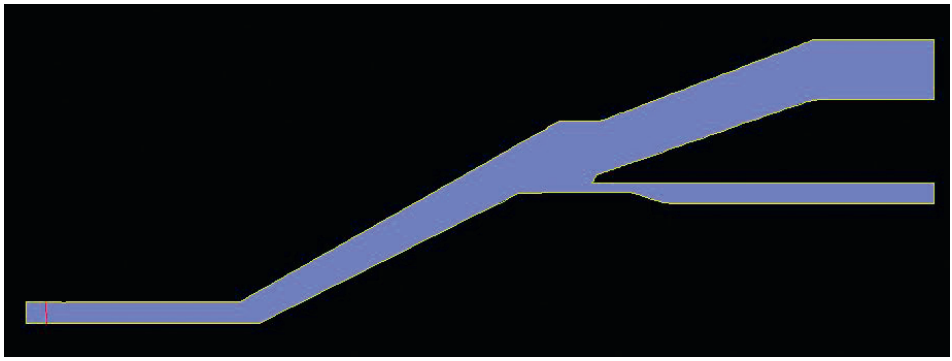

Figure 10.21 Position of cut near the die exit

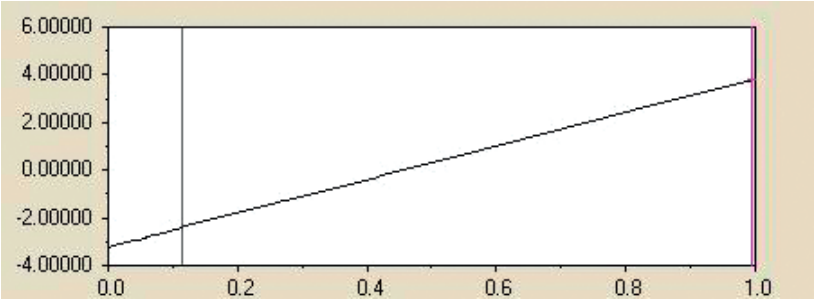

Figure 10.22 Graph of shear stress near the die exit

The above variables are important for the design of a coextrusion die; there are more variables listed in the software, but they are seldom used in practice. It was a sheer coincidence that the materials used for the design of the above die have viscosities close to each other; as a result there have been very little problems at the interface of the two melt streams. When there are much greater differences in the viscosities of two or more materials for the coextrusion, then either the processing conditions or the die geometry have to be manipulated to minimize the interface instabilities.

The idea behind showing these resultant variables from the software was to make the reader aware of the complexity involved in the design of coextrusion dies. For this reason, coextrusion dies are normally tailor-made for particular applications, and coextrusion dies designed for one set of materials do not always work with a combination of other materials. In some cases, the change of a grade of the same generic material could yield different results due to viscosity differences. In such cases, it becomes necessary to change the processing conditions. The manipulation of processing conditions can result in a lot of valuable production resources wasted before satisfactory results are achieved. For this reason it is recommended that, if there are problems with the use of a coextrusion die, the matter should be referred to an expert die designer.

Two basic types of coextrusion die design have been explained in this chapter: (a) extruding the first layer separately and then combining it with the second layer and (b) extruding two or more layers together. The first case does not require much explanation, as the two dies are separately designed to bring the two layers together. The second type of dies, where two or more layers are extruded together, is much more complicated; therefore, the design aspects of these dies are explained in detail in the following chapters.

In this chapter, a coextrusion die for micro-ducting for fiber optics has been given as an introduction to coextrusion dies. The coextrusion of two or more materials together causes complications due to interface instabilities, as has been shown above, but very little has been explained about the design of such dies. The complete design of this die is given in the next chapters.

11 Coextrusion Die (∅5.00 mm to ∅16.00 mm)

An introduction to coextrusion die design for extruding two layers together was given in the last chapter. The die used in the example there was for 2-layer micro-ducting of ∅5.00 mm to ∅16.00 mm tubes. Very little about the design technique was mentioned in the last chapter. Most of the discussion was based on one of the problems of bringing two or more materials together and the resultant interface instabilities. Here the complete design strategy of the die is discussed. The die considered is a crosshead die, which means that the feed of the materials is from 90° to the axial flow or the line direction. The design is for two layers of tubes made from HDPE on the outside and silicon-modified HDPE on the inside. The layer ratios are based on 90% of the total wall thickness on the outside and 10% on the inside. The die also has the facility to stripe on the outside of the tubes when required. Full product specifications and processing information are given in the design brief below.

11.1 Design Brief

The information regarding the products to be manufactured, materials used, processing conditions, and equipment installed at the plant is collected from the customer and shown in Table 11.1.

Table 11.1 Design Brief

1.	Product	Micro-duct for conductors or fiber optics.
2.	Product range	All sizes of tubes are given in Table 11.2. The die is designed to make tubes of ∅5 mm to ∅16 mm, but the customer's present requirement is only up to ∅14 mm. Detailed sizes of the tubes specified are given in Table 11.2.
3.	Wall thicknesses	Wall thicknesses and wall ratios of outside diameters and inside diameters are given in the draw down ratios table (Table 11.2).

Table 11.1 Design Brief *(continued)*

4.	Material used	The material specified by the manufacturer of microtubes is a particular grade of HDPE manufactured by Safripol Grade Safrene® F7665 for the outside layer and 5–7 % silicon-modified of the same material for the inside layer.
5.	Rheology data	Obtained from the material manufacturers by the customer.
6.	Thermodynamic properties	Thermodynamic properties were obtained from the material manufacturers and supplied by the customer.
7.	Extruders	⌀90 mm single screw extruder capable of plasticizing 250 kg/h of HDPE for the outer layer and ⌀38 mm single screw extruder for the inside layer are used.
8.	Calibrators	Calibrators were supplied by the manufacturer of the vacuum bath and no further information was available.
9.	Cooling bath	Adequate vacuum bath and spray cooling baths facility are installed.
10.	Haul-off	Suitable for the product range, installed.
11.	Cutter	Does not concern the die design.
12.	Winder	Suitable winder from the customer.

11.2 Product Sizes and Tooling Sizes

From the product information provided by the die user, tooling sizes were calculated using adequate draw down ratios, as shown in Table 11.2.

Table 11.2 Draw Down Ratios and Tooling Sizes

	1	2	3	4	5	6	7	8	9	10
	Two layers	Tube OD [mm]	Tube ID [mm]	Wall thick-ness [mm]	Die ID [mm]	Pin OD [mm]	DDR	Material thick-ness at the die tip [mm]	Total material thick-ness at die exit [mm]	Die land length [mm]
1	Outer layer	**5.00**	3.64	0.68	**10.00**	7.28	4	1.36		
	Inside layer	3.64	**3.50**	0.07	7.28	**7.00**	4	0.14	1.50	18.00
2	Outer layer	**7.00**	5.63	0.69	**12.60**	10.13	3.24	1.23		
	Inside layer	5.63	**5.49**	0.07	10.13	**9.88**	3.24	0.13	1.36	16.32

	1	2	3	4	5	6	7	8	9	10
	Two layers	Tube OD [mm]	Tube ID [mm]	Wall thick-ness [mm]	Die ID [mm]	Pin OD [mm]	DDR	Material thick-ness at the die tip [mm]	Total material thick-ness at die exit [mm]	Die land length [mm]
3	Outer layer	**8.00**	5.30	1.35	**14.40**	9.54	3.24	2.43		
	Inside layer	5.30	**5.00**	0.15	9.54	**9.00**	3.24	0.27	2.70	32.40
4	Outer layer	**10.00**	8.18	0.91	**18.00**	14.72	3.24	1.64		
	Inside layer	8.18	**8.00**	0.09	14.72	**14.40**	3.24	0.162	1.80	21.60
5	Outer layer	**12.00**	9.28	1.36	**20.40**	15.78	2.89	2.31		
	Inside layer	9.28	**9.00**	0.14	15.78	**15.30**	2.89	0.238	2.55	30.60
6	Outer layer	**12.00**	10.18	0.91	**20.40**	17.31	2.89	1.55		
	Inside layer	10.18	**10.00**	0.09	17.31	**17.00**	2.89	0.153	1.70	17.00
7	Outer layer	**14.00**	10.38	1.81	**22.40**	16.61	2.56	2.90		
	Inside layer	10.38	**10.00**	0.19	16.61	**16.00**	2.56	0.304	3.20	32.00

The table of draw down ratios (Table 11.2) is slightly different to previous tables, which were for monolayer tubes and pipes. In Table 11.2, column 2 shows in bold the actual outside diameters of the tube (e.g., 5.00) and column 3 shows in bold the actual inside diameters (e.g., 3.50). In column 3 the tube ID (e.g., 3.64) for the outside layer and in column 2 the tube OD (e.g., 3.64) for the inside layer are theoretical values for design purposes. Similarly, in columns 5 and 6 the values in bold are the actual tooling dimensions, and the others are theoretical values for design and simulation. In column 7 the draw down ratios for the outer layer and inner layer are the same.

The design of a coextrusion die is started in the same way as for a monolayer die—namely, the design is started from the die exit of the tooling part and then other sections, of distribution and feed, are added to it. In the case of monolayer dies there is only one distribution section and one feed section, but in the case of a coextrusion die there are as many distribution and feed sections as layers in the coextrusion die. The design of the above die is shown in detail in the following sections.

11.3 Output Calculations for Different Tube Sizes

The maximum output required from the die is 200 kg/h, but this applies to the largest size of the tubes and all other sizes should have lower output; otherwise, either the line speed would be too high to handle the product or the pressure drop through the die would be too high for die stability, or the shear stress at the last part of the tooling would be too high, resulting in shark skin effect on the product—making the product quality unacceptable. Therefore, the output for the simulation is scaled down according to the size of the tubes. Table 11.3 shows the output for each size and the corresponding line speed for each size of tube required.

The calculations in Table 11.3 are straightforward and may not need any explanation. Still, the following descriptions can clarify the meaning of each column:

Column 1 indicates the outside and inside diameter of the same size of the tube. Column 2 is the layer designation. Column 3 indicates the output of the main extruder and column 4 is the calculated output of mass for the second extruder from the same line speed, as calculated for the outside layer. Column 5 is the solids density of each material used. Column 6 is the volumetric output and it is calculated by dividing the main extruder's output by the density for the outer layer; for the inside layer, the line speed [m/h] is multiplied by the tube cross section area. Columns 7 and 8 are taken from Table 11.2, and column 9 is the cross section area of each layer and it is calculated from columns 7 and 8 for both the outside and inside layers. Column 10, for the outside layer, is calculated by dividing the volumetric output in column 6 by the cross section area of the tube (in square meters) and column 11 is obtained by dividing column 10 by 60. For the inside layer, columns 11 and 10 are the same as for the outside layer. In column 4, the output for the secondary extruder is calculated in reverse order by multiplying the density by the volumetric output.

The above calculations are for two-layer tubes; for multiple layers, the calculations for the outside layer are the same as above and the other layers are calculated as the inside layer in Table 11.3.

Table 11.3 Output Calculations for Different Tube Sizes

1	2	3	4	5	6	7	8	9	10	11
Tube size	Layer	Material output for main extruder [kg/h]	Output of secondary extruder [kg/h]	Material density [kg/m^3]	Output volume [m^3/h]	Tube OD [mm]	Tube ID [mm]	Cross section area [mm^2]	Length of tube per hour [m/h]	Length of tube per min. [m/min]
14/10	Outer layer	185		954	0.19392034	14.00	10.38	69.32	2798	46.63
	Inside layer		15.83	930	0.01715247	10.38	10.00	6.08	2798	46.63
12/10	Outer layer	181		954	0.18972746	12	10.18	31.70	5984	99.74
	Inside layer		15.88	930	0.1711728	10.18	10.00	2.85	5984	99.74
12/9	Outer layer	185		954	0.19392034	12.00	9.28	45.46	4260	71.10
	Inside layer		15.95	930	0.01714924	9.28	9.00	4.02	4266	71.10
10/8	Outer layer	149		954	0.1518449	10.00	8.18	25.99	6010	100.17
	Inside layer		12.79	930	0.0137469	8.18	8.00	2.29	6010	100.17
8/5	Outer layer	161		954	0.1687631	8.00	5.30	28.20	5984	99.73
	Inside layer		13.51	930	0.01452197	5.30	5.00	2.43	5984	99.73
7/5.5	Outer layer	78		954	0.08176101	7.00	5.63	13.59	6016	100.27
	Inside layer		6.36	930	0.00683677	5.63	5.50	1.14	6016	100.27
5/3.5	Outer layer	52.50		954	0.05503145	5.00	3.64	9.23	5963	99.38
	Inside layer		4.35	930	0.0046813	3.64	3.50	0.79	5963	99.38

11.4 Design of 2-Layer Plus Striping Die for Micro-Duct ⌀5.00 mm to ⌀16.00 mm

The steps taken in the design of this die are as follows:

11.4.1 Tooling Section

As mentioned previously, the starting point of the design of any die is the design of the tooling section. Initially, the die is designed for the largest product in the range and then the tooling sections for other sizes are designed. In this case the tooling section is designed for tubes of ⌀14/10, as shown in Figure 11.1, although the die is capable of making ⌀16 mm tubes. The dimensions for the tooling section of the pin and die (i. e., the die inside diameter, the pin outside diameter, and the die land length) are taken from Table 11.2 . The rest of the dimensions are conventional, as for any other design of pins and dies described in the previous chapters for monolayer dies.

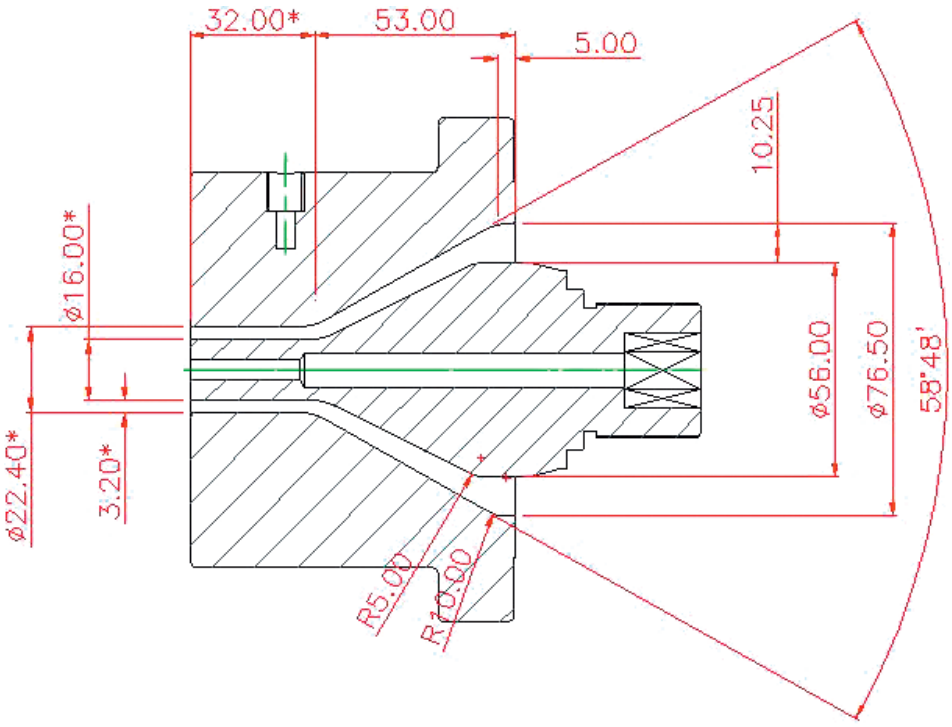

Figure 11.1 Design of pin and die for ⌀14/10 tubes

Table 11.2 also shows the dimensions of the outside layer and the inside layer. For design purposes, a temporary line is drawn separating the dimensions of the outside and inside layers, as shown in Figure 11.2. This will indicate the gap for each layer at the top end of the pin and die, where the two melt streams are brought to flow together.

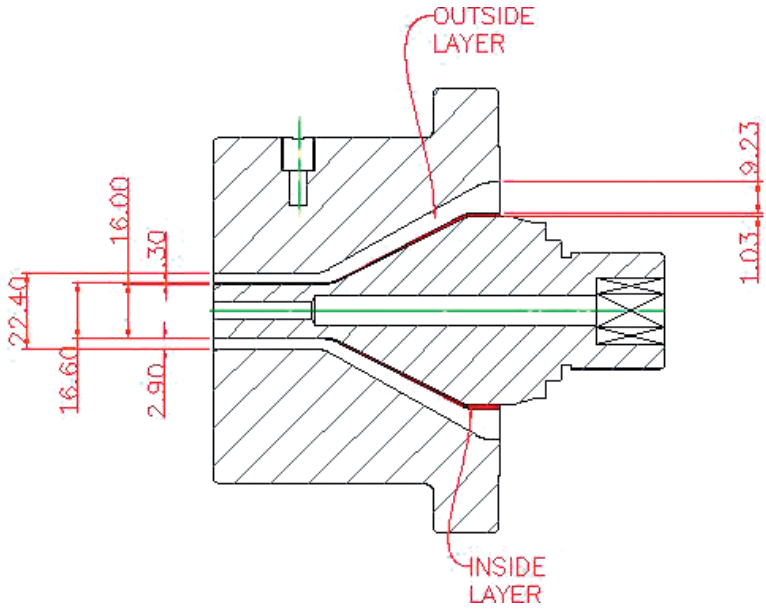

Figure 11.2 Proportions of the thicknesses of two layers in the gap between the die and the pin

11.4.2 Distributor Sections

In this case there are two distributors, one for the outside layer and one for the inside layer.

11.4.2.1 Outside Layer Distributor

After the design of the tooling section, firstly the main layer (i. e., the outside layer) distributor and body are designed, as shown in Figure 11.3. The reason for designing the main layer first is that the whole design of the die is dependent on this layer, because the maximum material output is in this layer. The inside layer is fitted inside the main layer, and the striping mechanism is fitted in the body to stripe on the outside of the main layer and will be shown later. As described in Section 10.2 in the previous chapter, the die is designed for an output of 200 kg/h, and 90% of the material is in the outside layer and only 10% in the inside layer.

Therefore, it is important to get the outside layer geometry right. The outside layer distributor and body are designed to match the tooling section, which has already been designed. To ensure the correctness of the geometry of the body and the outside layer distributor, the flow of the material through the outside mandrel and body is simulated using suitable simulation software.

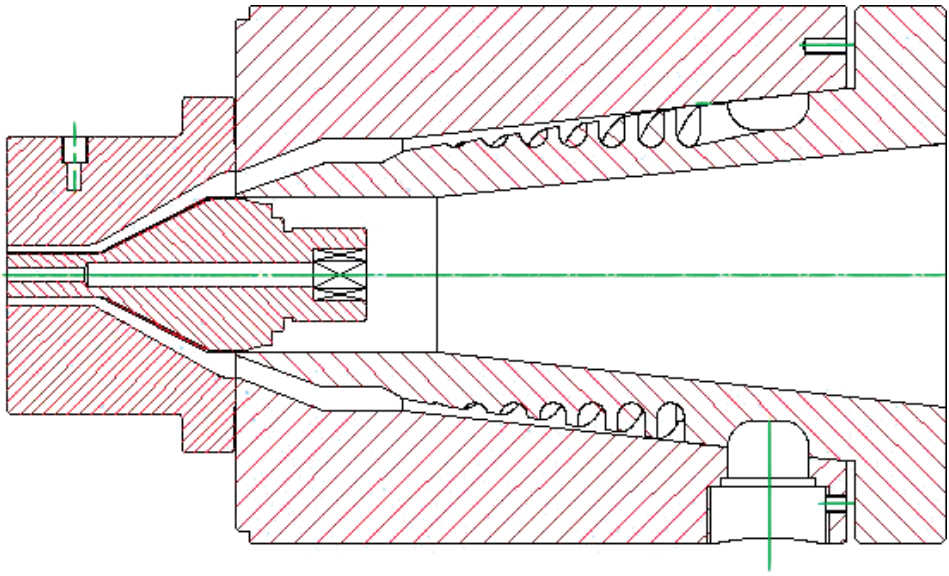

Figure 11.3 Die and pin with outside layer distributor and body

The above die is simulated using Compuplast® SpiralCad™, with the die geometry and the material data as given below:

11.4.2.1.1 Outside Layer Die Geometry for Simulation

The die geometry, as stated previously, has three sections: the feed section, the distributor, and the tooling. In the case of the outer layer or main layer (with maximum output) all three sections are simulated. In Figure 11.3 the feed port is only shown; for simulation purposes, the length of the feed through the flange adapter to the mandrel is 240 mm and the diameter is 30 mm, which is not shown in the drawing. This die being a side-fed die, the feed to the spirals is a ring feed, as described in the previous chapter. The width of the ring around the mandrel is 30 mm and the depth of this ring is 10 mm.

The mandrel has seven spirals and the start of the first spiral is opposite to the feed port, which delivers the melt from the extruder to the ring on the mandrel. There are seven connecting grooves from the ring to the spirals and the geometry of each of the grooves varies according to the position of the groove in relation to the main feed, so that an even amount of melt is fed into each spiral. As it is a

complicated exercise to balance the flow from the ring feed to the spirals, a special program within the software has been used by the author and it is shown in the simulation results below. The rest of the geometry used for the simulation is shown in Figure 11.4.

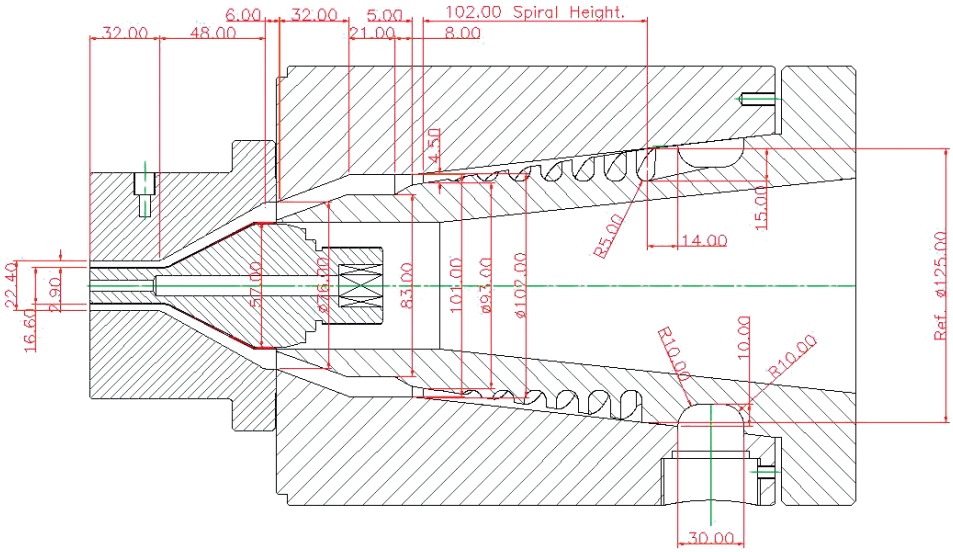

Figure 11.4 Dimensions of mandrel and tooling as used for die simulation

The dimensions used for the die simulation can be listed for clarification as follows:

11.4.2.1.2 Body, Mandrel, and Spirals Dimensions for Simulation

The body, mandrel, and spirals dimensions used for the simulation are shown in Table 11.4.

Table 11.4 Body, Mandrel, and Spirals Dimensions

1.	Reference diameter (diameter in the middle of the start of spirals)	⌀125.00 mm
2.	Spiral height (from the middle of the start of spiral to end of spiral)	102.00 mm
3.	Diameter of mandrel at the end of spirals	⌀92.00 mm
4.	Gap between the body and mandrel at the start of spirals	0.025 mm
5.	Gap between the body and mandrel at the end of spirals	4.500 mm
6.	No. of ports feeding the spirals	7
7.	Number of spirals	7
8.	Radius at the bottom of spirals at the start	5.00 mm
9.	Depth of spirals at the start	15.00 mm
10.	Depth of spirals at the end	0.05 mm

11.4.2.1.3 Dimensions of Tooling Part from the End of Spiral to the Die End

The dimensions of the tooling part from the end of the spiral to the die end are shown in Table 11.5.

Table 11.5 Dimensions of Tooling Part (from End of Spirals to Die Exit)

	Mean diameter at the end of section [mm]	Total height from start [mm]	Height of section [mm]	Gap at the beginning [mm]	Gap at the end [mm]
1.	92.250	5.00	5.00	4.50	4.50
2.	92.00	13.00	8.00	4.50	9.00
3.	92.00	34.00	21.00	9.00	9.00
4.	66.50	32.00	9.00	9.00	9.00
5.	66.50	72.00	6.00	9.00	9.00
6.	19.50	120.00	48.00	9.00	2.90
7.	19.50	152.00	32.00	2.90	2.90

11.4.2.1.4 Feed Section

For simulation purposes, only one section of the flange connection is simulated, as the die is connected through the feed from the extruder, which is offset from the center of the line. The section used for simulation is not shown in Figure 11.4 and is shown later in the complete die (Figure 11.6). The length of this section is 240 mm and its diameter is 30 mm, feeding into the ring around the mandrel. The width of the ring around the mandrel is 30 mm and it is 10 mm deep. The 7 ports connecting from the ring to the spirals are assumed to be 10 mm wide for simulation and the actual width is simulated separately. The dimension input into the software for this section is shown in Table 11.6.

Table 11.6 Dimensions of Feed Section

	No. of sections	Length L [mm]	Diameter ⌀ [mm]	Cross section area [mm^2]
1.	1	240.00	30.00	706.86
2.	7	20.00	10.00	78.54

11.4.2.1.5 Balancing of Flow through Ports to Spirals

One of the problems experienced with the ring feed is that the ports closer to the feed into the ring take the maximum amount of melt and the ports away from the feed have the least melt flow. This results in thick and thin sections at the die exit, which sometimes are very difficult to balance manually with the die adjustment. To overcome this problem, special software is used to balance the flow from the

ring to the spirals. Using this software, the dimensions of the feed to the spirals from the ring are shown in Figure 11.5.

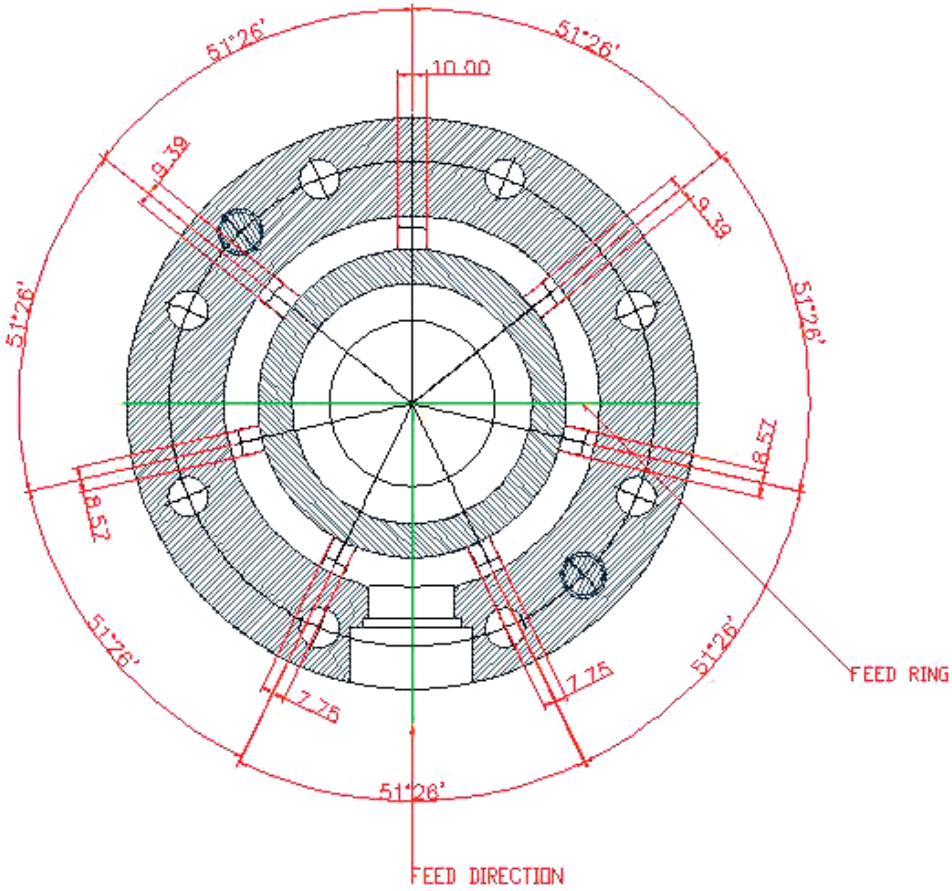

Figure 11.5 Dimensions of feed ports connecting feed ring to the spirals

As can be seen from Figure 11.5, the first two ports—one on each side of the feed from the extruder to the ring—are of the smallest size, 7.75 mm; the next two ports—one on each side—are 8.57 mm; the next two ports are 9.39 mm; and the last one port—opposite the feed—is 10 mm. As the width of the spirals at the start is 10 mm, the largest port connecting to the spiral is kept with the same dimension and the others are allowed to vary for ease of die manufacturing.

With the above geometry, the following processing conditions are also put into the software to simulate the melt flow results. The processing conditions are as follows:

11.4.2.1.6 Processing Conditions for Outer Layer

- Die temperature: 210 °C
- Material: Safrene M7650 (known thermodynamic properties)
- Melt flow rate: 185 kg/h
- Melt temperature: 220 °C

With the input of the above data into the simulation software, the software gives results of the flow variables. The summary of the important variables is given in Table 11.7.

Table 11.7 Flow Variables in the Outer Layer

	Pressure drop [MPa]	Shear rate [s^{-1}]	Shear stress [kPa]
1. Feed section			
a. Flange adapter to ring feed	1.99	31.70	62.16
b. Branches connecting ring feed to spirals	0.97	142.47	121.10
2. Spiral section			
	8.64	145.64	121.41
3. Section above the spirals to die exit			
	7.15	574	123

- Total pressure drop: 18.74 MPa
- Average flow rate in the spiral section: 1.0307 $cm^3/s \pm 4.57\,\%$
- Average flow rate at the die exit: 1.0307 $cm^3/s \pm 0.56\,\%$

The values of shear rate and shear stress are average values. The total pressure drop in the main layer being well below the threshold means that any small amount of pressure drop from the thin inside layer would still make the die safe for operation. Once the geometry of the main layer mandrel is established, then the inside layer distributor is fitted inside the outer mandrel as shown in the following section.

11.4.2.2 Inside Layer Distributor

Having designed the outside layer distributor and simulated the whole outside layer, now the inside layer distributor is added to the outside layer mandrel as shown in Figure 11.6.

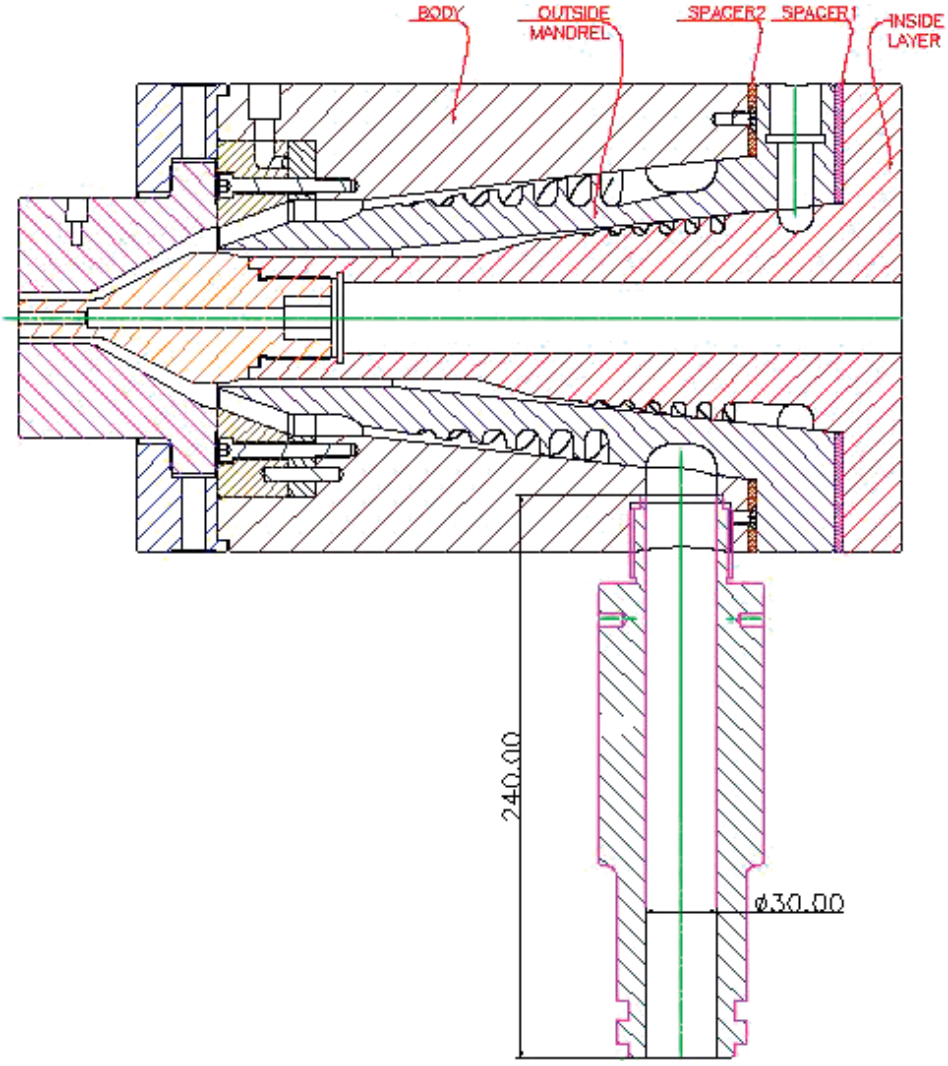

Figure 11.6 Inside layer mandrel inserted into outside mandrel

The dimensions of the inside layer mandrel are shown in Figure 11.7.

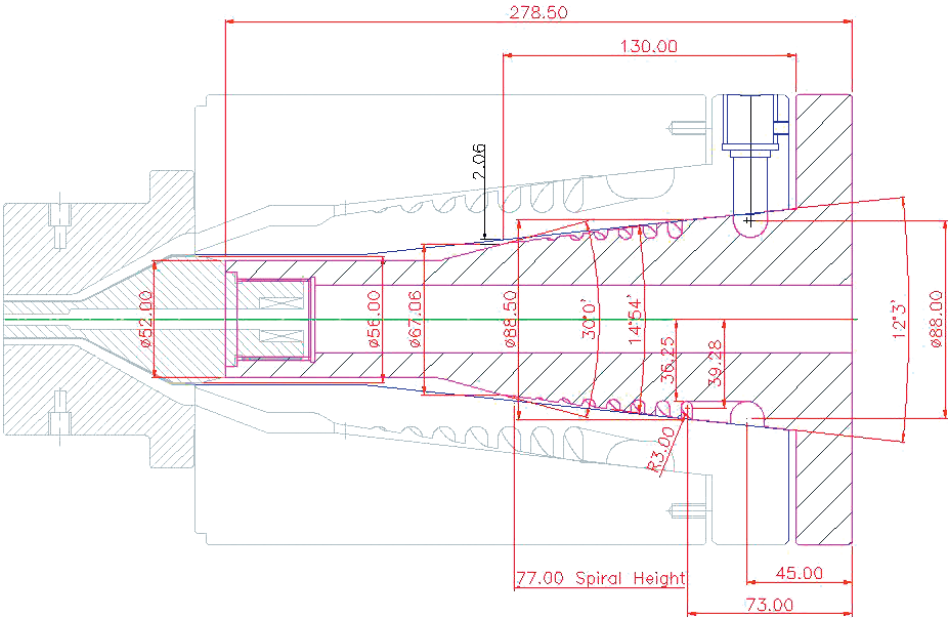

Figure 11.7 Dimensions of inside mandrel for flow simulation

11.4.2.2.1 Dimensions of Inside Layer Mandrel

The dimensions used for the flow simulation of the inside layer mandrel are listed in Table 11.8; it should be noted that the inside geometry of the outside mandrel has been used as the body for the inside layer.

Table 11.8 Dimensions of the Inside Mandrel for Melt Flow Simulation

1.	Reference diameter (diameter in the middle of the start of spirals)	⌀88.50 mm
2.	Spiral height (from the middle of the start of spiral to end of spiral)	77.00 mm
3.	Diameter of mandrel at the end of spirals	⌀70.95 mm
4.	Gap between the body and mandrel at the start of spirals	0.025 mm
5.	Gap between the body and mandrel at the end of spirals	2.50 mm
6.	No. of ports feeding the spirals	7
7.	Number of spirals	7
8.	Radius at the bottom of spirals at the start	3.00 mm
9.	Depth of spirals at the start	8.00 mm
10.	Depth of spirals at the end	0.05 mm

11.4.2.2.2 Dimensions of Section above the Spirals to Pin and Die

It should be noted that the dimensions of the complete tooling section to the die exit have been included with the outside layer; therefore, the dimensions simulated with the inside layer on top of the spiral section are of the section above the spirals to the pin and die, as shown in Table 11.9.

Table 11.9 Dimensions of Section above the Spirals to End of Pin and Die

	Mean diameter at the end of section [mm]	Total height from start [mm]	Height of section [mm]	Gap at the beginning [mm]	Gap at the end [mm]
1.	74.00	5.00	5.00	2.50	2.50
2.	58.50	36.00	31.00	2.50	6.50
3.	55.00	69.00	33.00	6.50	3.00
4.	55.00	132.00	63.00	3.00	3.00
5.	57.00	140.00	8.00	3.00	1.00
6.	57.00	152.50	12.50	1.00	1.00

11.4.2.2.3 Feed Section

Like for the previous outer layer, the feed of melt from the extruder is from the side and the extruder is offset from the center of the die. Only one straight section of ⌀15 mm × 200 mm long is used for simulation. The feed ring is 15 mm wide × 10 mm deep cut around the mandrel. 7 slots from the feed ring are feeding the melt into 7 spirals in the mandrel. The dimensions of the feed section required for the simulation are shown in Table 11.10.

Table 11.10 Dimensions of Feed Section

	No. of sections	Length L [mm]	Diameter ⌀ [mm]	Cross section area [mm^2]
1.	1	200.00	15.00	176.72
2.	7	18.00	6.00	28.27

11.4.2.2.4 Flow from Ring to Spirals

The flow from the feed ring to the spirals is balanced by the software, as explained previously. The dimensions of the width of the feeds to the spirals are shown in Figure 11.8. As can be seen from Figure 11.8, all the ports are of the same size. The reason for this is that the sectional diameter of the ring is very small; therefore, none of the feed ports need any correction. This means that the larger the mandrel diameter, the greater is the difference in the feeding ports.

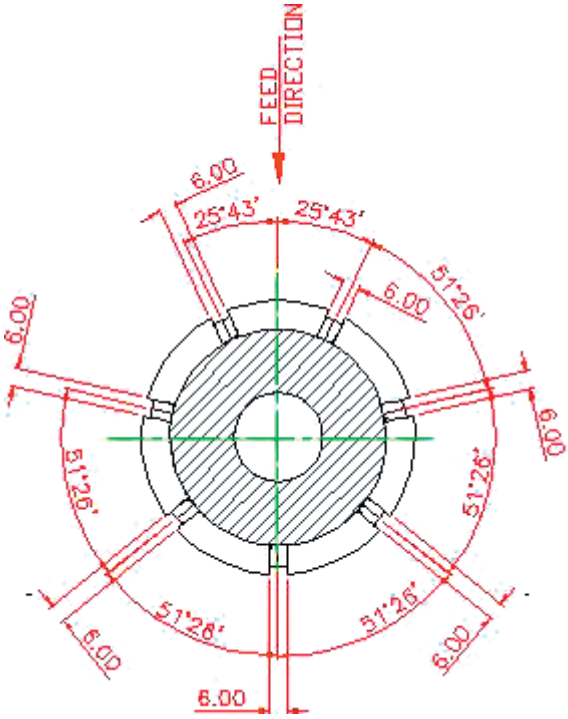

Figure 11.8 Dimensions of feed ports connecting feed ring to spirals

11.4.2.2.5 Processing Conditions

Having defined the geometry of the inside layer up to the point where the inside layer melt joins the outside layer melt, for the simulation of the flow variables it is essential to define the processing conditions. The following processing conditions are put into the software to get the final results of the flow variables:

- Die temperature: 210 °C
- Material: silica modified HDPE of the same grade as above
- Melt flow rate: 15.00 kg/h
- Melt temperature: 210 °C

11.4.2.2.6 Flow Variables

The software gives the main variables shown in Table 11.11, which are essential for decision making; that is, to decide whether the flow characteristics are suitable for the melt flow or further tweaking of the die geometry or the processing conditions is necessary.

Table 11.11 Flow Variables of Inside Layer

	Pressure drop [MPa]	Shear rate [s^{-1}]	Shear stress [kPa]
1. Feed section			
a. Flange adapter to ring feed	2.79	15.84	43.58
b. Connecting ports	0.85	37.82	71.22
2. Spiral section			
	6.50	38.43	69.93
3. Section above the spirals to main stream			
	5.81	113.03	119.94

- Total pressure drop: 18.74 MPa
- Average flow rate at the end of spirals: 0.0675 $cm^3/s \pm 2.5\%$
- Average flow rate at the die exit: 0.0675 $cm^3/s \pm 0.02\%$

The above values are all within the specified limits; therefore, there is no need for any further changes.

The above geometry and simulation results for the inside layer have been defined to the extent where the melt joins the main melt flow. The flow variables in the tooling part have been separately defined in the previous chapter. Normally, the simulations of the two parts—namely, the whole tool and the part where two or more materials flow together—are defined together. A similar exercise is carried out for multilayer dies of more than two layers, as will be seen in the following chapters.

11.5 Striping

Striping has been mentioned in several places in the above text, but nothing has been explained about what striping is and how it is done. Striping on tubes and pipes has become common in recent years. Basically, stripes of different colors are used on the tubes and pipes for identification. Initially, stripes became popular on telephone ducting, where the same size of duct of the same outer color is used for a number of customers; hence, it becomes difficult to distinguish to which customer or supplier the tube or pipes belong. To eliminate the confusion, a different color and/or number of stripes are put on the products. The most common number of stripes are 2, 4, or 8.

There is no defined standard for the stripes and, as a rule of thumb, each stripe covers about 6 % of the circumference. The reason for using 2, 4, or 8 stripes is that it is easy from a tool design and manufacturing perspective. A striping arrangement is best if it is designed as a part of the tool design, and the best place to incorporate it in the tool is in the front section, as shown in Figure 11.6. Sometimes it is incorporated in the die bush, which works fine if there is only one size of die bush to be used. On the other hand, if a tool is to be used for multiple sizes, then it is best to incorporate it in the front of the body as is shown in Figure 11.9.

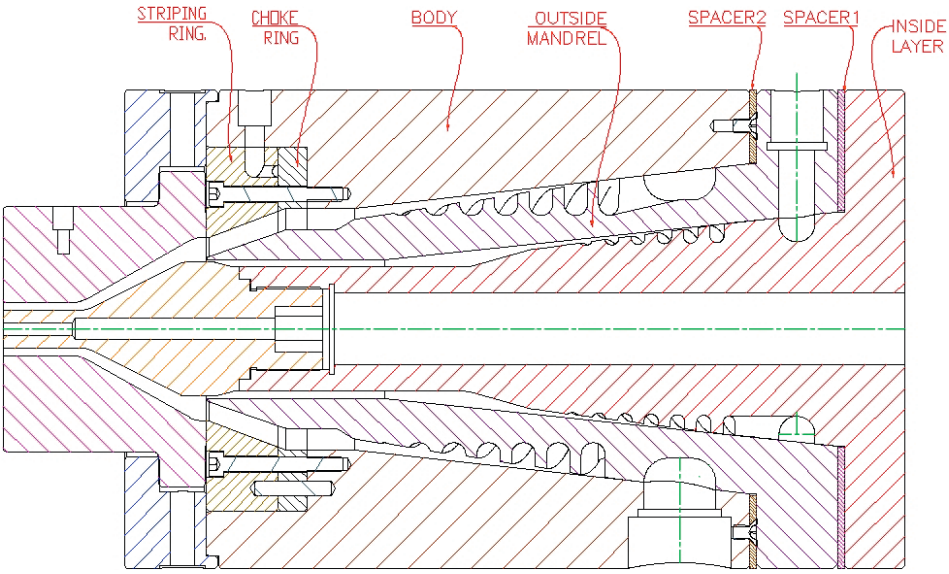

Figure 11.9 Striping arrangement incorporated in the die body

As shown in Figure 11.9, the front of the die body is machined out to house two plates (e. g., the choke ring and the striping ring). The die body also shows a material inlet port where another small extruder for striping can be connected. The orientation of this feed port is determined by the plant layout and it can be left, right, top, or bottom of the die. The purpose of the choke ring is to seal the melt between the mating faces of the striping ring and the choke ring. As shown above, the melt is brought from the die body to the face of the striping ring and then distributed along the face of the striping ring as shown in Figure 11.10.

Figure 11.10 Face of striping ring for 4 stripes

In Figure 11.10, the melt is brought to the face of the ring and firstly it is divided into two parts, and then each part is again divided into two parts, which gives 4 equally spaced channels from where it leaks onto the outside layer melt flow. The output of melt into the striping ring is very low, as the purpose of striping is creating a marking on the outer surface of the product and this marking has very little depth. Similarly, 2 or 8 stripes can be created.

One further problem is found with the multiple layer dies, and that is the bolting of the dies. In the case of monolayer dies, the number of bolts used to hold the die plates together is selected by guessing and this normally works; but in the case of multilayer dies, it becomes essential that an adequate number of bolts to hold all the sections is used. As the pressure drop in the extrusion dies is maximum in the back, the bolts on the back of the die are the more critical ones. The calculations for the necessary number of bolts are shown below.

11.6 Calculation of Number of Bolts Required for Die Head

The calculations for the number of bolts required for the above die head are given in Table 11.12.

Table 11.12 Calculation of Number of Bolts Required for Die Head (Outer Layer)

1	2	3	4	5	6	7	8
Reference diameter [mm]	Area of pressure [mm^2]	Maximum pressure [bar]	Force exerted by pressure [N]	Induced load of bolt [N]	Calculated no. of bolts	Round no. of bolts	Actual force exerted by bolts [N]
125.00	12271.85	400	490874	126000	3.9	4	504000

- Column 1 in Table 11.12 is the reference diameter where there is maximum melt pressure. As shown in Figure 11.4, the reference diameter is 125 mm.
- Column 2 is the area of the mandrel at the reference diameter; it is calculated as follows:

$$\text{Area} = \frac{\pi}{4} \times 125^2 = 12271.85 \text{ mm}^2$$

- Column 3—maximum pressure: All the dies demonstrated above have been based on a maximum pressure drop of 20 MPa, which is 200 bar. Here, for safety, the value of pressure is set at 400 bar, which has a safety factor of 3.
- Column 4: The force F exerted by the pressure in column 3 on the reference diameter is calculated as follows:

$$F = \text{area [mm}^2\text{]} \times \text{pressure [bar]} = 12271.85 \times 400/10 = 490874 \text{ N}$$

- Column 5: The induced load of a bolt is available from the fasteners' manufacturers and in this case, for M16 bolts of ISO grade 12.9, it is 126000 N.
- Column 6: The calculated no. of bolts is obtained by dividing column 4 by column 5, which is:

$$\text{No. of bolts} = \frac{490874}{126000} = 3.9$$

- Column 7: The calculated number of bolts 3.9 is rounded to 4 bolts.
- Column 8: The actual force F_B exerted by 4 bolts is the induced load of a bolt (column 5) multiplied by the number of bolts (column 7), which is:

$$F_B = 126000 \times 4 = 504000 \text{ N}$$

The above calculations are based on the outside layer and the die head above is a 2-layer tool; therefore, to calculate the total number of bolts required for holding both layers, similar calculations for the inner layer are performed, as shown in Table 11.13.

Table 11.13 Calculation of Number of Bolts Required for Die Head (Inner Layer)

1	2	3	4	5	6	7	8
Reference diameter [mm]	Area of pressure [mm^2]	Maximum pressure [bar]	Force exerted by pressure [N]	Induced load of bolt [N]	Calculated no. of bolts	Round no. of bolts	Actual force exerted by bolts [N]
88.50	6151.43	400	246057.39	126000	1.95	2	252000

From the calculations in Table 11.12 and Table 11.13, the number of bolts required for the above die head is M16 × 6. The view of the back of the die head in Figure 11.11 shows that there are 8 M16 bolts fitted in the die head. For convenience, the same number of bolts is fitted on the front of the die head, between the die clamp plate and the die body, although the pressure in the front part of the die is much lower. Therefore, different values of tightening torque are used for the front and back bolts.

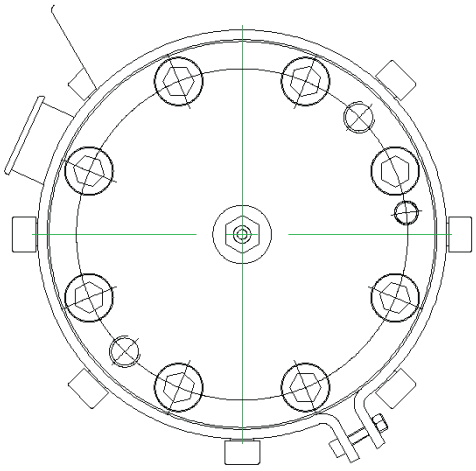

Figure 11.11 View of the back of the die head showing the number of bolts

The value of maximum tightening torque varies from manufacturer to manufacturer and must be checked with the specific manufacturer. As a rule of thumb, the tightening torque of the bolts at ambient temperatures of 10 °C to 35 °C should be about 70 % minimum and 82 % maximum of the tightening torque of the bolts from the manufacturers' chart. Bolts normally come in 3 grades of properties according to BS 6104 and ISO 898/1 standards: 8.8, 10.9, and 12.9. The last grade, 12.9, is

commonly used for extrusion dies. Table 11.14 shows the values of maximum torque for grade 12.9 in relation to bolt sizes. This table is taken from the Unbrako® catalogue of hexagon socket screws. Table 11.14 also gives the values of the induced load used for the calculations of the number of bolts required for the die. For example, an M16 of standard pitch of 2.00 has a maximum tightening torque of 330 N·m and the tightening used for the dies is about 260–265 N·m at ambient temperature.

This completes the die design criteria for a coextrusion die; the only part of the die that has not been described here or in the previous chapters is the heating of the die, which is covered below. The complete design of the die is shown in Figure 11.12.

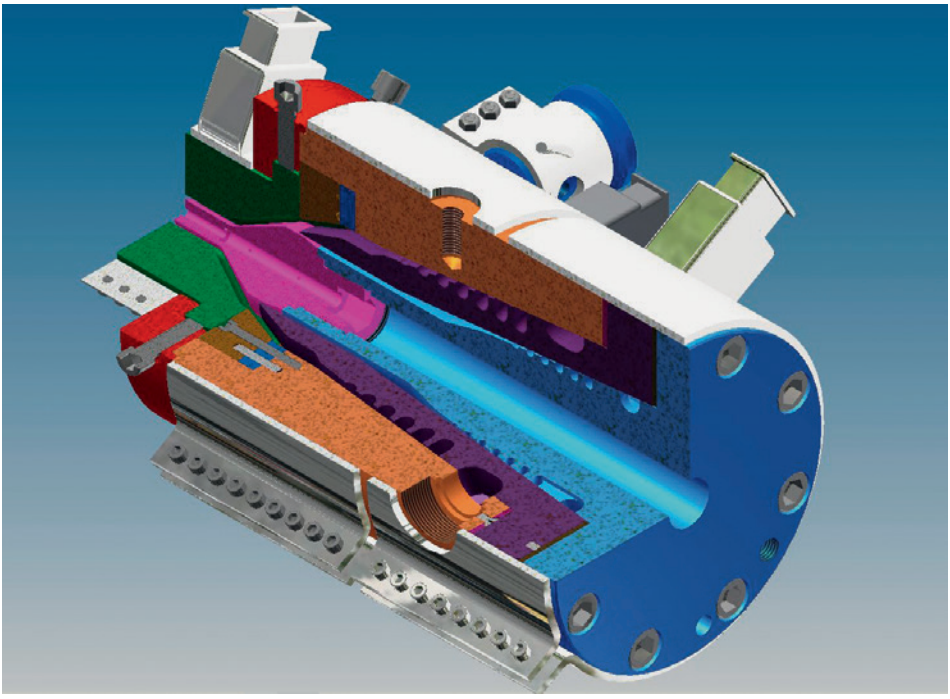

Figure 11.12 Three quarter section view of the complete die

Table 11.14 Maximum Tightening Torques for Metric Bolts, Screws, and Nuts; Courtesy of Unbrako®

Metric

HIGH-GRADE ALLOY STEEL

Suitable for all high tensile applications. Up to 1300 Mpa– highest of any socket cap screw. Use Stainless for corrosive, cryogenic or elevated temperature environments.

Equivalent Standards

ISO 4762, DIN 912, ASME B18.3.1M
BS 4168-1

Mechanical Properties

Screw Size	≤M16	>M16
Heat Treatment	40-43 HRC	40-43 HRC
Tensile Strength	1300 N/mm^2	1250 N/mm^2
Yield Strength	1170 N/mm^2	1124 N/mm^2
Shear Strength	780 N/mm^2	750 N/mm^2
Min. Elongation	9%	9%

Notes:

1. Screws with lengths equal to or shorter than listed in column 'L' are threaded to head.
2. Property Class : 12.9
3. Thread Class : 4g6g
4. Working Temperature : -50°C to +300°C

5. Torques calculated in accordance with VDI 2230 "Systematic calculation of high duty bolted joints" with σ 0.2 = 1080 N/mm^2 and μ = 0.125 for plain finish and μ = 0.094 for plated.

Head Marking

- 'X' represents Lot Traceability E-CODE
- For Sizes M5 or Larger

Unbrako®

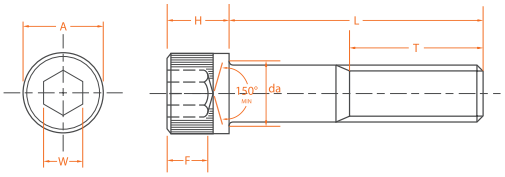

Product Dimensions (Standard Sizes)

Thread Size nom.	Pitch	Head Diameter A max	Hex Socket Size W nom.	Head Height H max	Socket Depth F min.	Transition Dia da max	Length L Note 1	Thread Length T ref.
M3	0.50	5.5	2.5	3.0	1.3	3.60	20	18
M4	0.70	7.0	3.0	4.0	2.0	4.70	25	20
M5	0.80	8.5	4.0	5.0	2.5	5.70	25	22
M6	1.00	10.0	5.0	6.0	3.0	6.80	30	24
M8	1.25	13.0	6.0	8.0	4.0	9.20	35	28
M10	1.50	16.0	8.0	10.0	5.0	11.20	40	32
M12	1.75	18.0	10.0	12.0	6.0	13.70	50	36
(M14)	2.00	21.0	12.0	14.0	7.0	15.70	55	40
M16	2.00	24.0	14.0	16.0	8.0	17.70	60	44
(M18)	2.50	27.0	14.0	18.0	9.0	20.20	65	48
M20	2.50	30.0	17.0	20.0	10.0	22.40	70	52
(M22)	2.50	33.0	17.0	22.0	11.0	24.40	70	56
M24	3.00	36.0	19.0	24.0	12.0	26.40	80	60
M27	3.00	40.0	19.0	27.0	13.5	30.40	90	66
M30	3.50	45.0	22.0	30.0	15.5	33.40	100	72
M33	3.50	50.0	24.0	33.0	18.0	36.40	100	78
M36	4.00	54.0	27.0	36.0	19.0	39.40	110	84
M42	4.50	63.0	32.0	42.0	24.0	45.60	130	96

Thread Size nom.	Recommended Torques Setting				Induced Load	
	Unplated		Plated			
	N-m	in-lbs.	N-m	in-lbs.	kN	lbf
M3	2.1	18.6	1.6	14.2	3.99	890
M4	4.6	40.7	3.5	31.0	6.75	1,510
M5	9.5	84.1	7.1	62.8	11.10	2,480
M6	16.0	142.0	12.0	106.0	15.60	3,480
M8	39.0	345.0	29.0	257.0	28.70	6,400
M10	77.0	682.0	58.0	513.0	45.70	10,200
M12	135.0	1,200.0	101.0	894.0	66.70	14,900
(M14)	215.0	1,900.0	161.0	1,420.0	91.30	20,400
M16	330.0	2,920.0	248.0	2,190.0	126.00	28,100
(M18)	455.0	4,030.0	341.0	3,020.0	153.00	34,100
M20	650.0	5,750.0	488.0	4,320.0	197.00	44,000
(M22)	870.0	7,700.0	652.0	5,770.0	245.00	54,700
M24	1,100.0	9,740.0	825.0	7,300.0	284.00	63,400
M27	1,650.0	14,600.0	1,238.0	11,000.0	374.00	83,400
M30	2,250.0	19,900.0	1,688.0	15,000.0	454.00	101,000
M33	3,050.0	27,000.0	2,287.0	20,200.0	550.00	123,000
M36	3,850.0	34,100.0	2,888.0	25,000.0	664.00	148,000
M42	6,270.0	55,500.0	4,700.0	41,600.0	889.00	198,000

Sizes in brackets are non-preferred standards

17

11.7 Heating of Extrusion Dies

Extrusion dies for the processing of thermoplastics are heated in several ways, such as with mica insulated heaters (as shown in Figure 11.12), ceramic and aluminum heaters, cartridge heaters, and fluid jacket heaters. In the case of extrusion dies for round profiles like tubes, pipes, and wire and cable dies, mica band heaters are commonly used. In the case of very large pipe and cable covering dies, ceramic and aluminum heaters are used because of their higher wattage capacity. Cartridge heaters are mainly used for internal heating of large pipe dies and profile dies of rectangular shapes.

In most extrusion dies, mica band heaters are formed in the shape of the die and clamped on the outside of the die, as shown in Figure 11.12. This ensures close contact between the heater body and the die outer surface, to provide a uniform heating of the die. The mica insulated band heaters are designed for power densities of 2 to 3.5 W/cm^2, and much higher power densities, of 5 to 8 W/cm^2, are achieved from ceramic and aluminum heaters. Mica band heaters are relatively much cheaper than ceramic and aluminum heaters, and they last as long as the others. The overall power capacity of band heaters is limited to 3000 to 3500 W. For larger dies, more heaters are used, rather than making them of higher power capacity. For this reason, two band heaters are used for the above die. It should also be noted that holes are cut in the heaters to correspond with the holes in the die body, for such facilities as flange adapter connections, thermocouple connections, air connections, and sometimes for pressure transducer connections. The supply of electrical power to the heating element is provided through a socket fitted to the heater body and a heat resistant plug fitted to the cable connecting to the power source. In the case of small heaters where a socket cannot be fitted, a direct insulated cable is connected to the heater body, on one end, and to a plug on the other end to connect to the power source. Mica band heaters have the following advantages and disadvantages:

Advantages:

1. Uniform heating of the wall of the die, as any local temperature differences even out due to the thickness of the metal in the die body
2. Ease of dismantling and connecting of the band heater (on die dismantling, cleaning, etc.)
3. Relatively inexpensive to replace on failure of the heater

Disadvantages:

1. A large distance between the heat source and the flow channel requires a higher set temperature than the required temperature in the flow channel
2. Locally increased temperature can affect the adjacent zone

3. When controlling different zones of a large die, control circuits can lead to unstable periodic oscillation
4. Low energy efficiency due to heat losses to the surroundings
5. Heating of the die on startup is very slow, and in some cases it takes several hours to heat up the die to bring it to operating temperature

Large diameter dies sometimes require internal heating to shorten the startup time, also to maintain the internal temperature of the die. This can be achieved by specially designed internal mica band heaters or, in some cases, a ring of aluminum is fitted inside the die, which is heated with series of cartridge heaters fitted in the wall of the aluminum ring.

Typical mica band heaters are shown in Figure 11.13 and Figure 11.14.

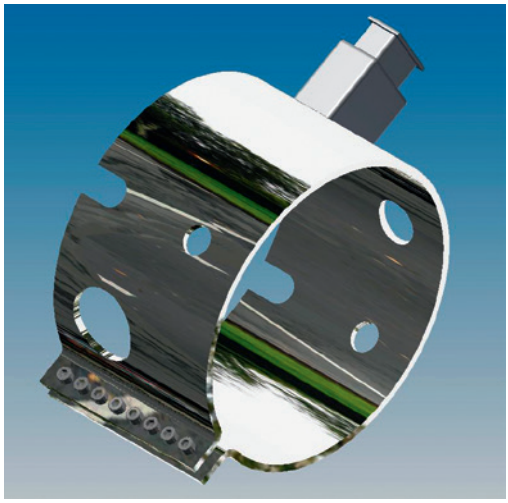

Figure 11.13 Body back heater for the die shown in Figure 11.12, 220 volts × 2500 watts

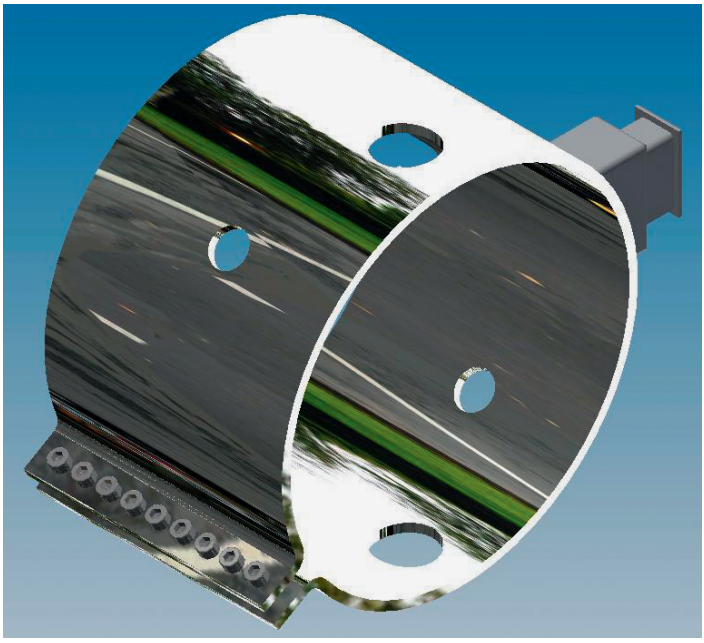

Figure 11.14 Body front heater for the die shown in Figure 11.12, 220 volts × 2500 watts

12 Coextrusion Three-Layer Die (∅20.00 mm to ∅65.00 mm)

The method of designing coextrusion dies has been shown in the previous two chapters. An introduction to types of coextrusion dies was given in Chapter 10 and the effects of bringing two or more materials together were discussed in detail. Chapter 11 was devoted to the design aspects of a 2-layer crosshead die for ∅5.00 mm to ∅16 mm 2-layer tubes with 4 stripes. The mechanism for striping on the tubes was also described in that chapter. Here the complete design of a 3-layer die and striping will be shown. A lot of information regarding the design of spiral distributors has been given in the previous chapters; therefore, only the relevant information concerning the design of spiral mandrels will be given here. The die in this chapter is designed for pipes of ∅20 mm to ∅65 mm, but only pipes of selected diameter are shown below. Other sizes of pins and die bushes can be designed easily following these examples.

The die below is designed as a 3-layer die for cable ducting. The outside layer is designed for producing different colors of HDPE; the middle layer can be a natural color of HDPE or can be a mixture of virgin material and factory regrind scrap. The inside layer is silica-modified HDPE to give a smooth surface for passing the fiber optics or cable through. Striping is for distinguishing the customers or markets in which these ducting pipes are used. As in the previous chapters, the design always starts with the design brief, as follows.

12.1 Design Brief

The information regarding the products to be manufactured, materials used, processing conditions, and equipment installed at the plant is collected from the customer and shown in Table 12.1.

Table 12.1 Design Brief

1.	Product	Micro-duct for conductors or fiber optics.
2.	Product range	This crosshead die is designed for a range of tubes from ⌀20 mm to ⌀65 mm, but the tools designed were as shown in Table 12.2.
3.	Wall thicknesses	Wall thicknesses and wall ratios of outside diameters and inside diameters are given in the draw down ratios table (Table 12.2).
4.	Material used	Material specified by the manufacturer of pipes in general grades of HDPE; a specific grade of a specific manufacturer was not given. It was stated that the outside layer would be virgin grade of HDPE with a master batch of different colors, the middle layer can be natural color of HDPE or a mixture of factory regrind and virgin HDPE, and the inside layer would be silicon modified HDPE.
5.	Rheology data and thermodynamic properties	Generic rheological and thermodynamic properties data for HDPE given in the software Compuplast® was used for simulation.
6.	Extruders	Main extruder has plasticizing capacity of 500 kg/h and other extruders have the capacity of 60 kg/h. Flange adapter details were supplied and no further information on the extruder was available.
		All other equipment is suitable for the production of these products.

12.2 Product and Tooling Sizes

From the product sizes given by the customer, tooling sizes were calculated using adequate draw down ratios, as shown in Table 12.2.

Table 12.2 Draw Down Ratios and Tooling Sizes

	1	2	3	4	5	6	7	8	9	10
	Three layers	Tube OD [mm]	Tube ID [mm]	Wall thickness [mm]	Die ID [mm]	Pin OD [mm]	DDR	Material thickness at the die tip [mm]	Total material thickness at die exit [mm]	Die land length [mm]
1	Pipe size 63/55									
	Outer layer	**63.00**	62.20	0.40	**75.60**	74.64	1.44	0.48		
	Middle layer	62.20	55.80	3.20	74.64	66.96	1.44	3.84		
	Inside layer	55.80	**55.00**	0.40	66.96	**66.00**	1.44	0.48	4.80	50.00

	1	2	3	4	5	6	7	8	9	10
	Three layers	Tube OD [mm]	Tube ID [mm]	Wall thickness [mm]	Die ID [mm]	Pin OD [mm]	DDR	Material thickness at the die tip [mm]	Total material thickness at die exit [mm]	Die land length [mm]
2	Pipe size 50/40.8									
	Outer layer	**50.00**	49.40	0.30	**60.00**	59.28	1.44	0.36		
	Middle layer	49.40	41.40	4.00	59.28	49.68	1.44	4.80		
	Inside layer	41.40	**40.80**	0.30	49.68	**48.96**	1.44	0.36	5.52	56.00
3	Pipe size 50/44									
	Outer layer	**50.00**	49.40	0.30	**60.00**	59.28	1.44	0.36		
	Middle layer	49.40	42.60	3.40	59.28	51.12	1.44	4.08		
	Inside layer	42.60	**42.00**	0.30	51.12	**50.40**	1.44	0.36	4.80	48.00
4	Pipe size 40/32.6									
	Outer layer	**40.00**	39.40	0.30	**52.00**	51.22	1.69	0.39		
	Middle layer	39.40	33.20	3.10	51.22	43.16	1.69	4.03		
	Inside layer	33.20	**32.60**	0.30	43.16	**42.38**	1.69	0.39	4.81	48.00
5	Pipe size 40/34.0									
	Outer layer	**40.00**	39.40	0.30	**52.00**	51.22	1.69	0.39		
	Middle layer	39.40	34.60	2.40	51.22	44.98	1.69	3.12		
	Inside layer	34.60	**34.00**	0.30	44.98	**44.20**	1.69	0.39	3.90	40.00
6	Pipe size 32/26.2									
	Outer layer	**32.00**	31.50	0.25	**41.60**	40.95	1.69	0.32		
	Middle layer	31.50	26.70	2.40	40.95	34.71	1.69	3.12		
	Inside layer	26.70	**26.20**	0.25	34.71	**34.06**	1.69	0.32	3.76	38.00

Table 12.2 is for three layer pipes and is similar in a way to the table in Chapter 11, with the exception that another layer has been added to it. For instance, the cell in column 1 and row 1 indicates the size of the pipe, 63/55, which means that ø63 mm is the outside diameter of the pipe and ø55 mm is the inside diameter of the pipe; as a result, the wall thickness of the pipe is 4.00 mm. This wall thickness is made of three layers of plastic: the outside layer is 0.40 mm thick, the middle layer is 3.20 mm thick, and the inside layer is 0.40 mm thick, as shown in column 4. The diameters of the three different layers are shown in columns 2 and 3. For instance, column 2 shows the outside diameter of the outer layer as 63.00 mm and the inside diameter of the outer layer as 62.20 mm, and so on. Separating the diameters of each layer in this way is useful for the calculations of the output of each material in the following Table 12.3. The calculated output then is used for the simulation of the flow of each material.

Columns 5 and 6 show the outside and inside diameters used for the design of the die bush and pin. The actual dimensions of the inside diameter of the die bush and the outside diameter of the pin are shown in bold in columns 5 and 6. These dimensions are calculated by multiplying the dimensions in columns 2 and 3 by a factor—the draw down ratio—, as explained previously. Column 8 shows the calculated material thickness of each layer at the die exit, and column 9 is the total thickness of all three materials at the die exit. Column 10 is the die land length, which is in this case 10 times the wall thickness. The die land, as mentioned previously, varies between 10 and 30 times the wall thickness.

12.3 Output Calculations for Different Pipe Sizes

The maximum output required from this die head is 500 kg/h. Unlike the previous dies, the main layer controlling the output is the middle layer. Therefore, the output of the outside layer and the inside layer will be calculated to match the output of the middle layer. Based on the maximum output for the largest size of the pipes (i.e., ⌀63/55 pipes), the outputs of the other sizes are calculated for the adequate line speed the plant is capable to handle, as shown in Table 12.3.

The dimensions of the pipes are the same as for the pipes in Table 12.2. Table 12.3 is similar to Table 11.3; therefore, the formulae used for the calculations in Table 12.3 have already been explained in the previous chapter. The information in this table will be used for the simulation of the melt flow in each of the layers of the die.

Table 12.3 Output Calculations for Different Pipe Sizes

1	2	3	4	5	6	7	8	9	10	11
Tube size	Layer	Material output for main extruder [kg/h]	Output of secondary extruder [kg/h]	Material density [kg/m^3]	Output volume [m^3/h]	Tube OD [mm]	Tube ID [mm]	Cross section area [mm^2]	Length of tube per hour [m/h]	Length of tube per min. [m/min]
63/55	Middle layer	500	–	952	0.525210084	62.20	55.80	593	885	14.76
	Outer layer	–	66.31	952	0.0696571	63.00	62.20	79	885	14.76
	Inside layer	–	58.69	952	0.061645421	55.80	55.00	70	885	14.76
50/40.8	Middle layer	500	–	952	0.525210084	49.40	41.10	571	921	15.34
	Outer layer	–	41.05	952	0.043121599	50.00	49.40	47	921	15.34
	Inside layer	–	33.95	952	0.035659914	41.40	40.80	39	921	15.34
50/42	Middle layer	460	–	952	0.483193277	49.40	42.60	491	983	16.39
	Outer layer	–	43.86	952	0.046064014	50.00	49.40	46.84	983	16.39
	Inside layer	–	37.32	952	0.048478042	42.60	42.00	39.87	983	16.39
40/32.60	Middle layer	400	–	952	0.420168067	39.40	33.20	354	1189	19.81
	Outer layer	–	42.34	952	0.044469934	40.00	39.40	37	1189	19.81
	Inside layer	–	35.08	952	0.036852918	33.20	32.00	31	1189	19.81
40/34.00	Middle layer	350	–	952	0.367647059	39.40	34.60	279	1318	21.96
	Outer layer	–	46.94	952	0.04930942	40.00	39.40	37	1318	21.96
	Inside layer	–	40.56	952	0.042602345	34.60	34.00	32	1318	21.96
32/26.20	Middle layer	300	–	952	0.31512605	31.50	26.70	219	1436	23.94
	Outer layer	–	34.10	952	0.035814906	32.00	31.50	25	1436	23.94
	Inside layer	–	28.40	952	0.029836355	26.70	26.20	21	1436	23.94

12.4 Design of 3-Layer Pipe Die for Pipes of ∅20 mm to ∅65 mm

As in the previous chapters, the design of the die involves three major steps: the tooling section, the distribution, and the feed section. In the case of multilayer coextrusion pipes, the distribution section has a number of distributors nested together and they are designed individually before fitting them together. The die head being demonstrated here has previously been designed, simulated, and manufactured; therefore, the steps of designing the die are shown from the existing design to illustrate the method of designing a 3-layer die for pipes. The starting point is always the tooling part and all the other parts are fitted to it.

12.4.1 Tooling Section

As always, the design of the die is started with the design of the pin and die bush, for which the dimensions marked with a * in Figure 12.1 are taken from Table 12.2. In Figure 12.1, the inside diameter of the die bush (75.60 mm) and the outside diameter of the pin (66.00 mm) are taken from Table 12.2; similarly, the land length (50.00 mm), which is roughly 10 times the die gap at the die exit, is taken from the table. Other dimensions are derived from conventional design principles for die and pin design, explained in the previous chapters. For instance, the gap at the top end of the die and pin is between 3 and 5 times the gap at the die exit, and the inclusive angle of the die in the convergent section is between 30° and 60°.

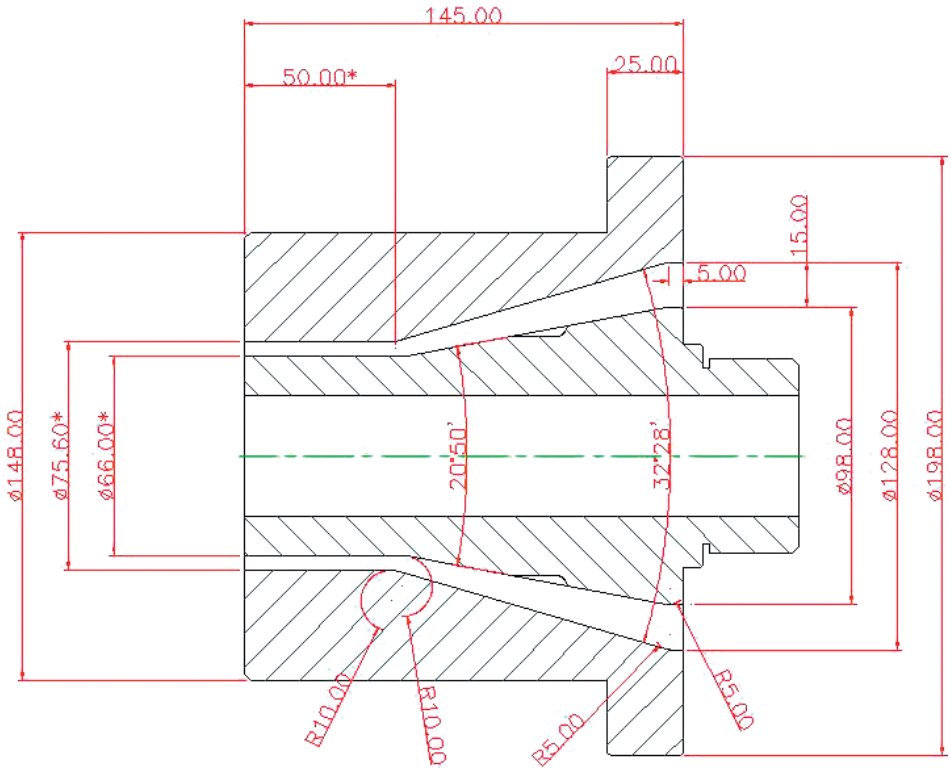

Figure 12.1 Pin and die bush for ∅63/55 pipes

Similarly, the design of the smallest size of the pipe in the table (∅32.00/26.20) is shown in Figure 12.2.

The design of a multilayer die for a range of sizes is always started with the largest size of the tooling in the range, as shown in Figure 12.1. Furthermore, as shown in the previous chapter, temporary lines are drawn in the tooling section showing the layer thicknesses of each layer to which the flow channels from distributors are connected. This division of the three layers in this case is shown in Figure 12.3. The dimensions at the die exit part of the tooling are taken from Table 12.2, columns 5 and 6.

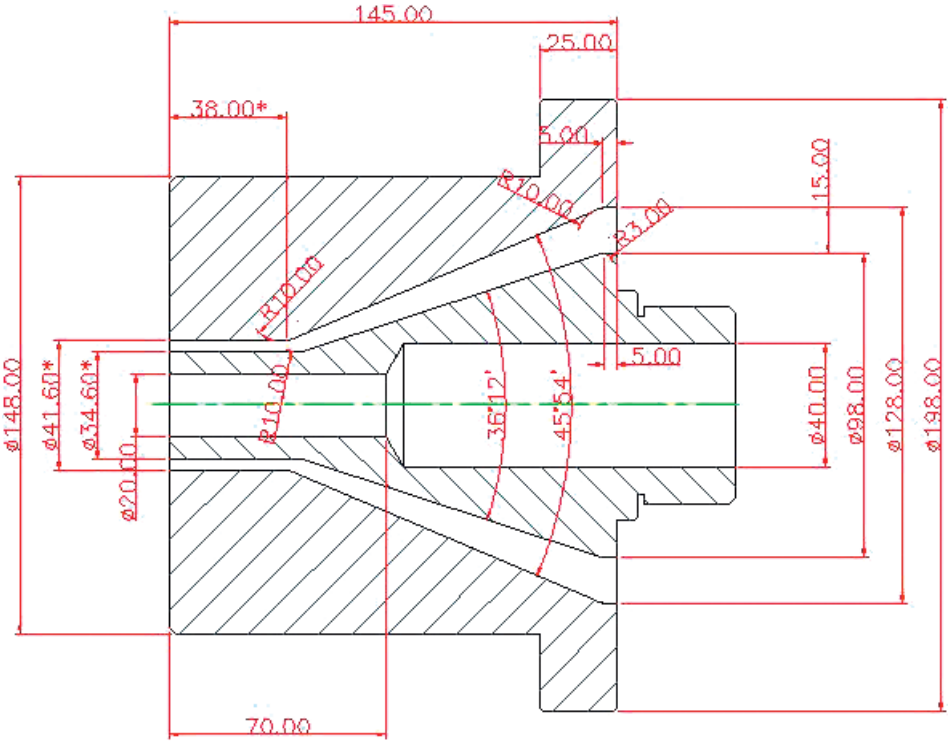

Figure 12.2 Pin and die bush for ⌀32/26.20 pipes

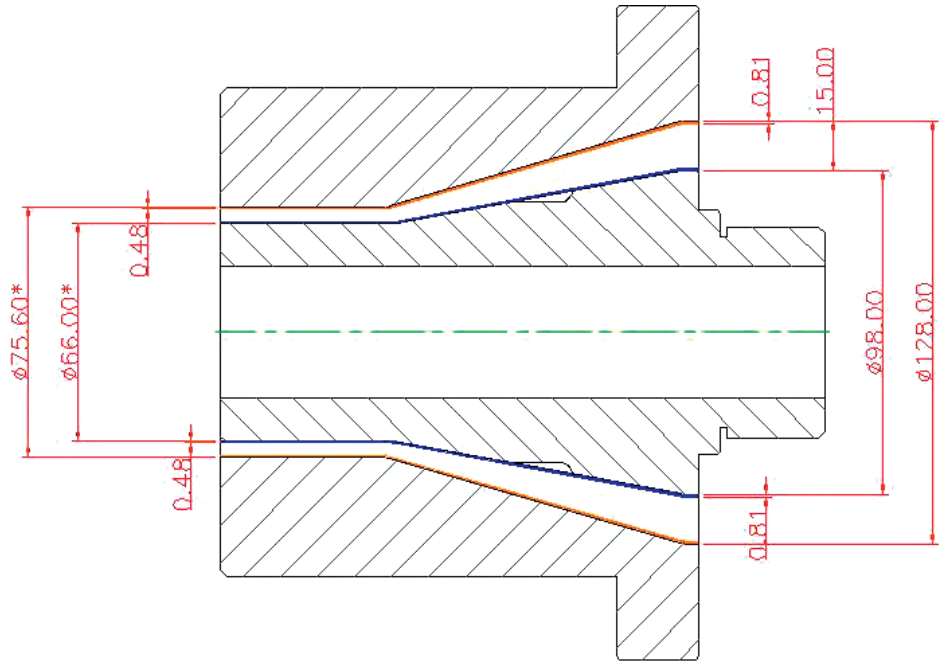

Figure 12.3 Material thickness at the die exit and entry to the pin and die

12.4.2 Distribution Section

After the design of the tooling section, the next one is the distribution section. In this case, the pipe to be made has 3 layers; therefore, there are three distributors nested together. The first distributor to be designed is the one for the outer layer, followed by the ones for the middle and inside layers, as shown below.

12.4.2.1 Outside Layer Distributor

After the design of the tooling section, the outside layer is designed to link with the tooling. The outside layer is made up of the body and the mandrel, but in this case, the provision for the striping mechanism is to be made; therefore, the body diameter is enlarged to incorporate the striping ring and the choke ring. Figure 12.4 shows the other parts that also have to be designed at the same time as the layer 1 mandrel and body.

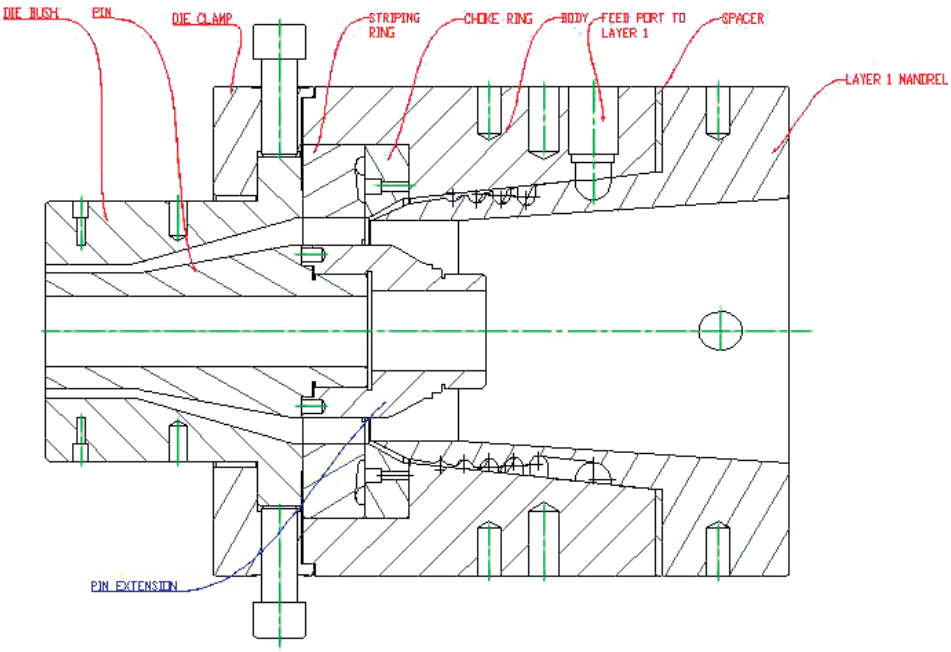

Figure 12.4 Layer 1 mandrel and body with other parts

The design of the mandrel and body with the striping ring and the choke ring is shown in a pictorial view in Figure 12.5.

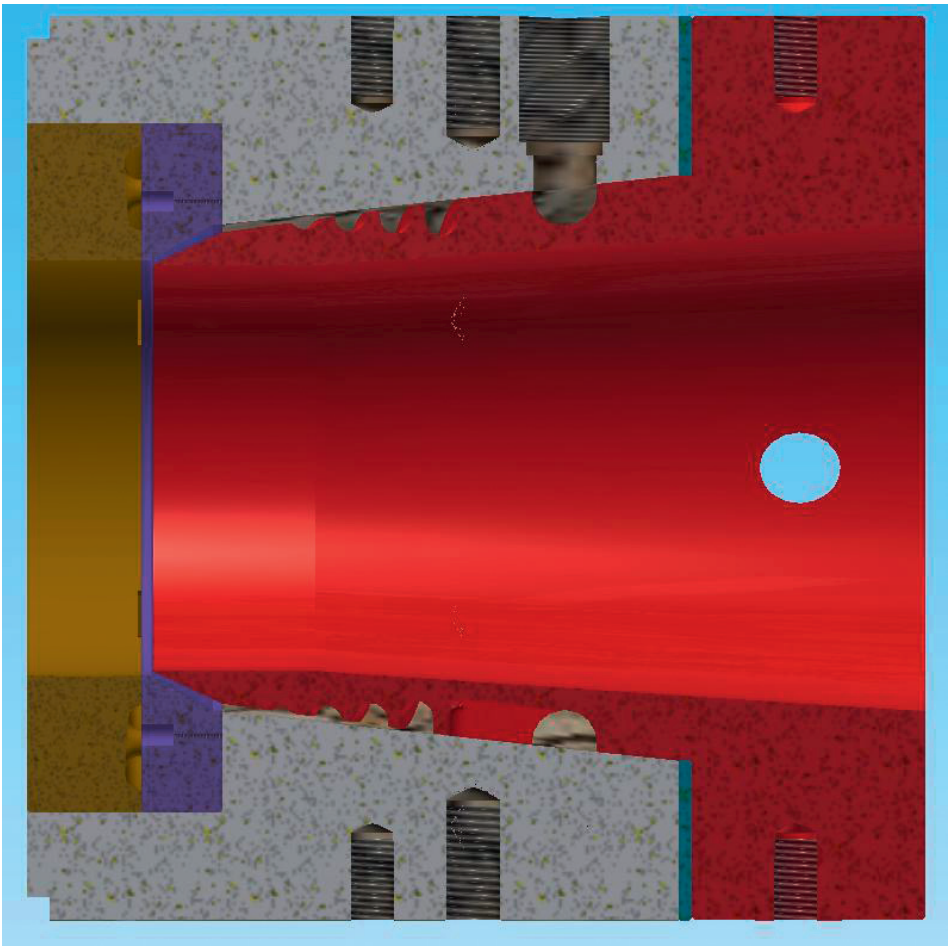

Figure 12.5 Pictorial view of body, layer 1 mandrel, and striping rings

The detailed drawings of the layer 1 mandrel and body with the important dimensions are shown in Figure 12.6 and Figure 12.7 for clarity. The dimensions marked with a * are the dimensions taken from these drawings and used for the simulation of the melt flow variables.

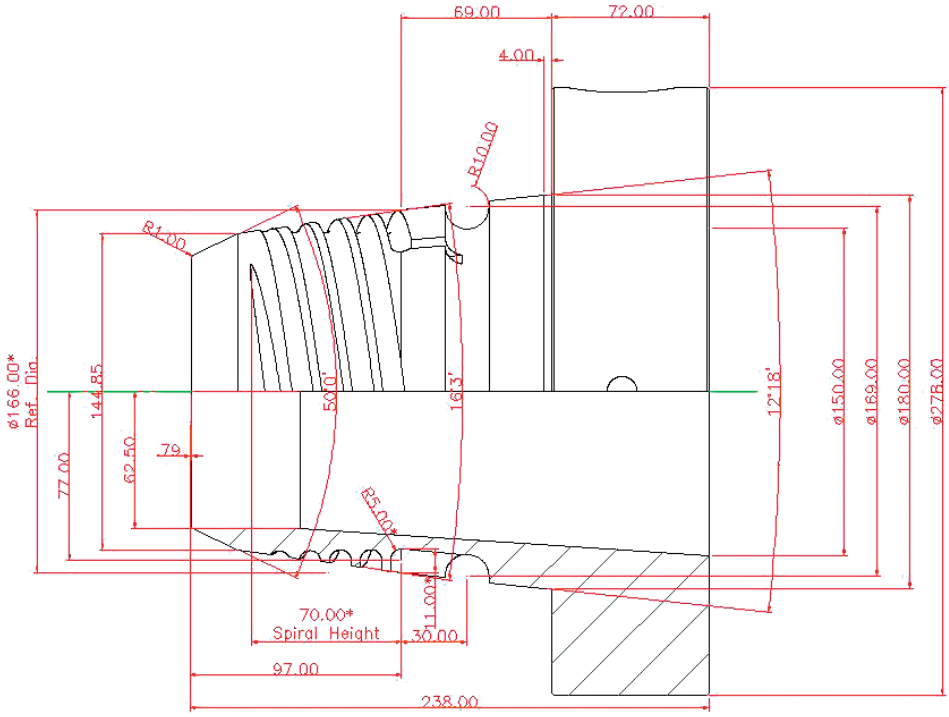

Figure 12.6 Layer 1 mandrel with important dimensions (outside layer)

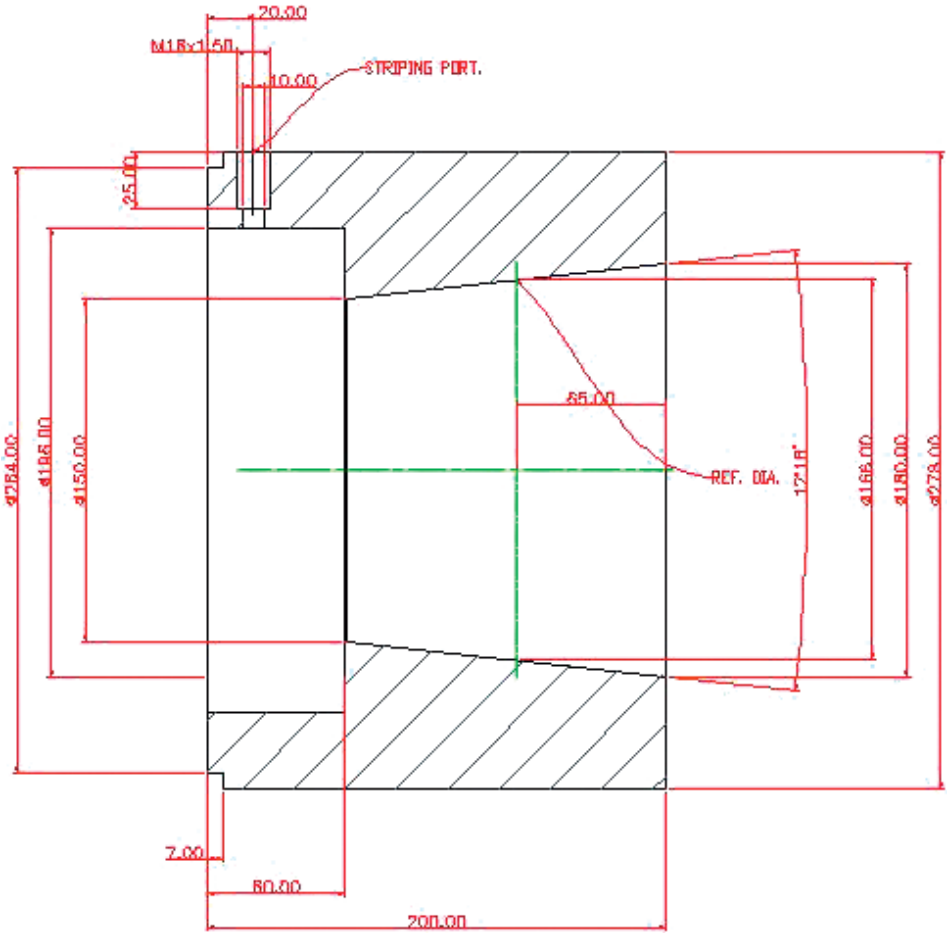

Figure 12.7 Important dimensions of the die body

12.4.2.2 Dimensions of Body, Mandrel, and Spirals

From the drawings in Figure 12.6 and Figure 12.7, the important dimensions of the body and the mandrel required for the simulation are listed in Table 12.4.

Table 12.4 Dimensions of Body, Mandrel, and Spirals (Outside Layer)

1.	Reference diameter (diameter in the middle of the start of spirals)	⌀166.00 mm
2.	Spiral height (from the middle of the start of spiral to the middle of the end of spiral)	70.00 mm
3.	Diameter of mandrel at the end of the spirals	⌀145.00 mm
4.	Gap between body and mandrel at the start of spirals	0.025 mm
5.	Gap between the body and mandrel at the end of spirals	2.50 mm

6.	Number of spirals	5
7.	Number of feed ports	5
8.	Radius at the bottom of spirals at the start	5.00 mm
9.	Depth of spirals at the start	11.00 mm
10.	Depth of spirals at the end	0.05 mm

As stated previously, there are three sections of the distributor: the feed section, the spiral section, and the section past the spirals. In the case of multilayer dies, the main layer is fully simulated including the section of tooling (i.e., the gap in between the pin and die), but in the case of other layers (thin layers), only the part past the spirals to the point where the layer joins the main stream of melt is simulated. The reason for this is that—because there is metal on one side of the layer and the bulk of the melt is on the other side—it becomes impractical to simulate the flow variables using this particular software. Therefore, another type of software is used for the simulation of the section combining all the layers, as will be seen later. Hence, in the case of the outside layer and the inside layer in this example, only a small section past the spirals is considered, as shown below.

12.4.2.3 Dimensions of the Part Past the Spirals

For the outside layer 1, the dimensions used for simulation are from the end of the spirals to the point where the melt of the outside layer joins the main stream melt. The dimensions for this section are shown in Figure 12.8 and are listed in Table 12.5.

Table 12.5 Dimensions of Section Past the Spirals Used for Simulation

#	Mean diameter at end of section [mm]	Total height from start [mm]	Height of section [mm]	Gap at the beginning [mm]	Gap at the end [mm]
1.	148.46	5.00	5.00	2.50	2.50
2.	146.03	8.00	3.00	2.50	2.50
3.	126.47	27.00	19.00	2.50	1.60

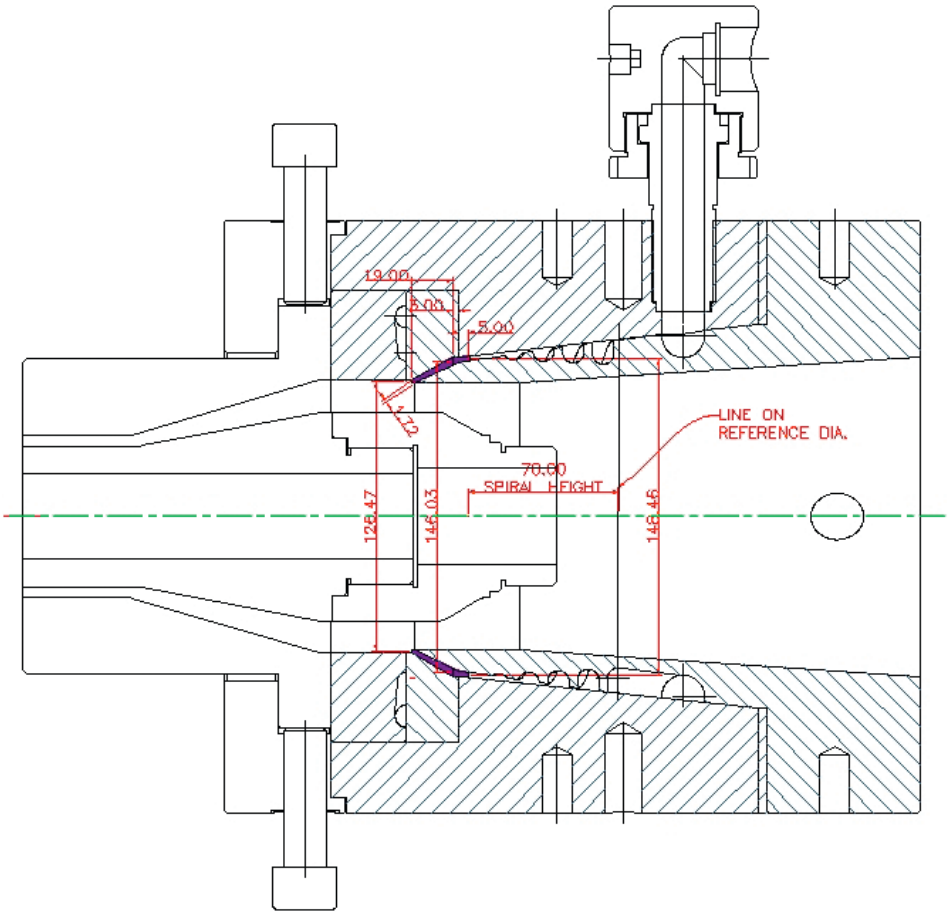

Figure 12.8 Dimensions of the section past the spirals

12.4.2.4 Feed Section

Initially, two parts of the feed section are taken into consideration: the straight tubular section delivering the melt from the extruder to the ring feed and the channels from the ring feed to the spirals. The size of the ring feed and the exact sizes of the channels to the spirals vary according to the diameter of the ring feed and the position of the channels in relation to the feed point, which is beyond the scope of the current software. This part is simulated separately using some other methods, as shown later. The dimensions considered for the purpose of simulating the flow variables through the outside layer, in this case, are shown in Figure 12.9 and Table 12.6.

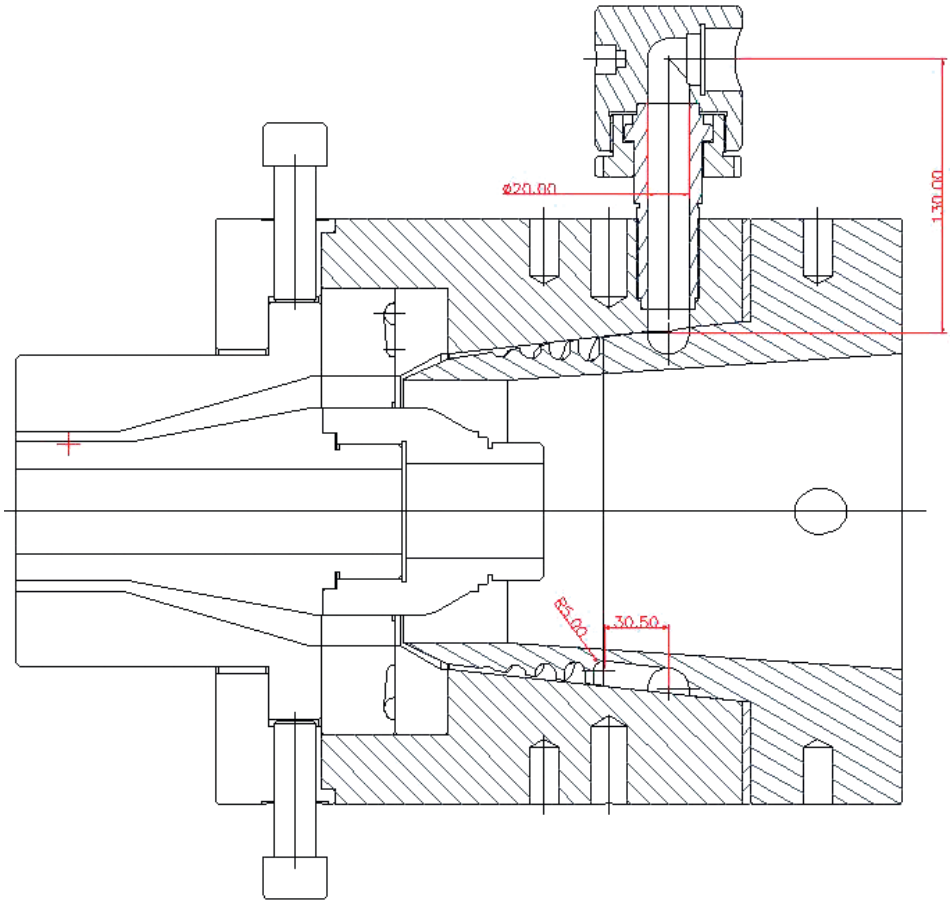

Figure 12.9 Dimensions of feed section (outside layer)

Table 12.6 Dimensions of Feed Section Used for Simulation

#	No. of sections	Length L [mm]	L/D	Diameter ∅ [mm]	Cross section area [mm^2]
1.	1	130.00	6.50	20.00	314.16
2.	5	30.50	3.05	10.00	78.54

In Table 12.6, row 2, there are five channels feeding from the ring to the spirals. It can be seen from this table that the cross section area of the first branch feeding the ring should be larger than the sum of the areas of the branches connecting to the spirals. Since the feeding ring is not a complete circle but half a circle with a straight part, such a small difference is ignored here. The dimensions of the feeding channels are further corrected in the flow balancing section below.

12.4.2.5 Balancing of Flow through Ports to Channels

As mentioned previously, the feed ports connecting the feed to the channels have to be balanced according to their position in relation to the feed point of the feed ring. The ports near the feed point would take the maximum melt from the feed ring, depriving the other ports of the available melt. This would result in thick and thin sections of the end product, which sometimes cannot be balanced by mechanical means. Therefore, they have to be either calculated or simulated using special software. Using the last method, the dimensions are balanced taking the position of the port and the size of the feed ring, as shown in Figure 12.10. The port opposite the feed from the extruder is fixed at the same size as the width of the spiral channels and other ports are varied. It should also be noted that, for ease of manufacturing, these ports are cut as channels of the given width in the case of small diameter mandrels, as they do not make a great deal of difference compared with large size mandrels, where they are made as round holes of the given diameters.

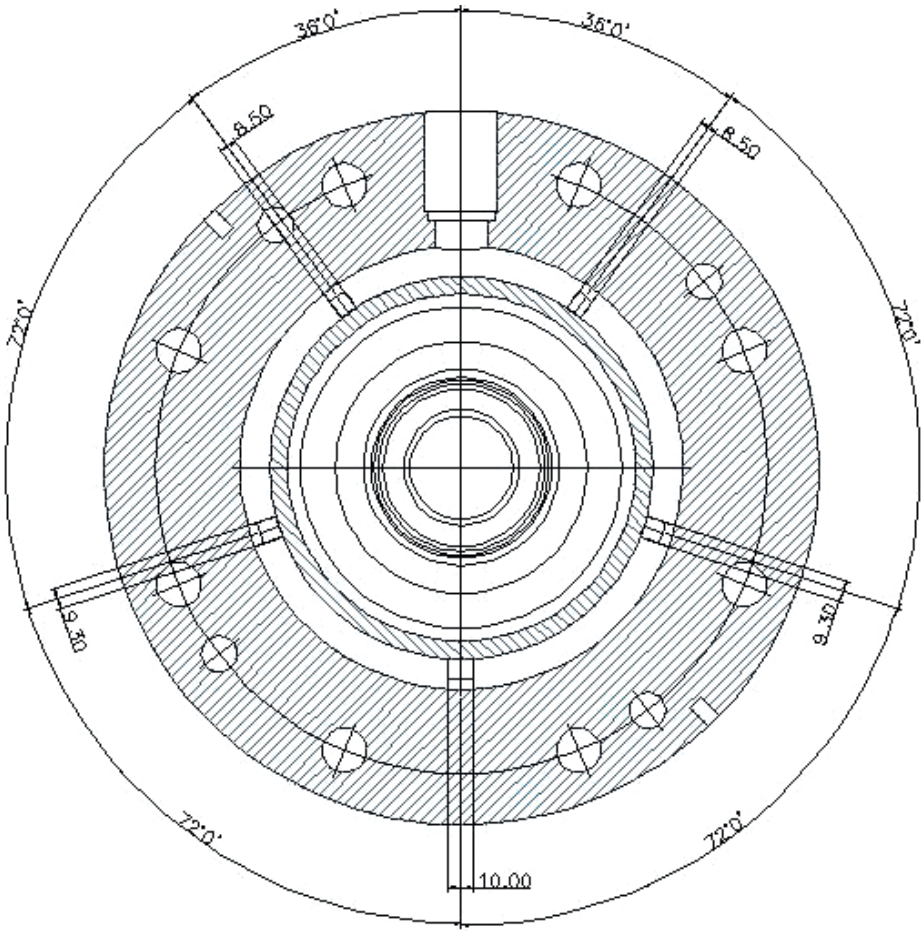

Figure 12.10 Position and sizes of feed ports connecting the feed ring to the spiral channels

As can be seen from Figure 12.10, the ports near the feed point are 8.50 mm wide, the next two ports on both sides are 9.30 mm, and the port opposite the feed is 10 mm wide. These sizes are calculated keeping the size of the feed ring at 20 mm wide. If the ring is made smaller or larger, the sizes of these ports vary. If the size of the feed ring is larger than 20 mm, the difference between the sizes of the ports is narrower and vice versa.

Now all the geometry of the outside layer 1 is defined, and the flow variables are simulated using the input of the materials and processing conditions as shown in the following section.

12.4.2.6 Processing Conditions for Outer Layer

- Die body temperature: 220 °C
- Material: HDPE – BP grade PC4014
- Melt flow rate: 66.31 kg/h
- Melt temperature: 220 °C

The output rate of 66.31 kg/h is taken from the calculations in Table 12.3 and is proportionate to the 500 kg/h output for the middle layer based on the pipe size of OD 63 mm and ID 55 mm. These processing conditions are linked with the above geometry and the software calculates all the variables of the melt flow; the summary of the results is given below:

12.4.2.7 Melt Variables Noted from the Software

The melt variables noted from the software are shown in Table 12.7.

Table 12.7 Melt Flow Variables in the Outside Layer as Noted from the Simulation

	Pressure drop [MPa]	Shear rate [s^{-1}]	Shear stress [kPa]
1. Feed section a. Flange adapter to feed ring b. Branches connecting feed ring to spirals	2.00 1.22	28.80 48.48	77.08 49.41
2. Spiral section	11.72	49.03 (max.)	97.56 (max.)
3. Section above the spirals to melt stream	2.81	74.26 (max.)	119.96 (max.)

- Total pressure drop: 17.75 MPa
- Average flow rate in the spiral section: 0.3881 $cm^3/s \pm 1.17\%$
- Average flow rate above the spirals to the main melt stream: 0.3881 $cm^3/s \pm 0.44\%$

The values of shear rate and shear stress in the spiral section and the section above the spirals vary through these sections; therefore, the maximum values are

given. Care is taken in the design of the die that the shear stress does not exceed 140 kPa, because a shear stress above this value is likely to cause melt fracture, and that the shear rate is not below 10 s^{-1}, as a lower shear rate would result in stagnation of the melt at the walls. The maximum value of pressure drop to the end point in the outside layer of the die being less than 20 MPa means that there is some latitude for a further pressure drop caused by the flow of the melt to the die exit.

12.4.3 Design of Second Layer (Middle Layer)

After the design of the outside layer, the second layer in the design of a multilayer die is designed to fit inside the outside layer. The second layer, in this case, is the main layer in the build of the final product, and the outside and inside layers are secondary layers to enhance the properties of the product; therefore, the main layer is designed and simulated from start to end, as is shown in the following section. Like in all die designs, this layer also has three sections: the feed section, the distribution section, and the tooling section. Since the distributor is designed to fit the distributor of the first layer, this section is designed first and the feed section is designed to suit the plant layout.

12.4.3.1 Second Layer Distributor

As described above, the second layer distributor or spiral mandrel in this case is designed to fit inside the first layer mandrel. The second layer in this case being the main layer, the output of the die is based on this layer in the output calculations from Table 12.3. Therefore, the geometry of this layer is designed to carry a maximum output of 500 kg/h for diameter 63 mm pipes. The feed to this layer is from the main extruder situated on the back of the die looking from the operator side and is at 90° from the direction of the flow, as shown in the 3D view in Figure 12.11. A 2D sectional drawing is shown in Figure 12.12 for clarity.

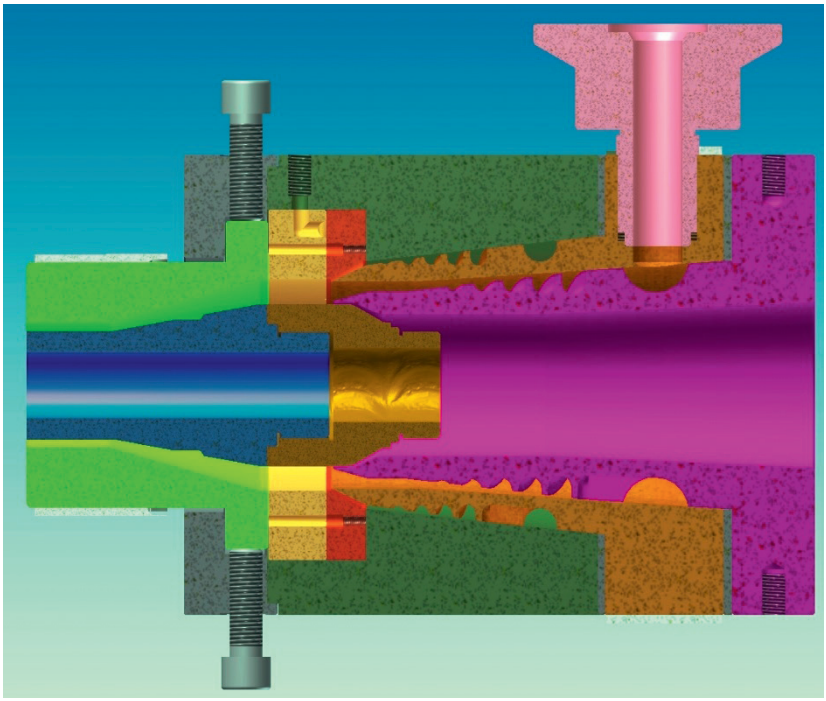

Figure 12.11 Arrangement of second layer distributor

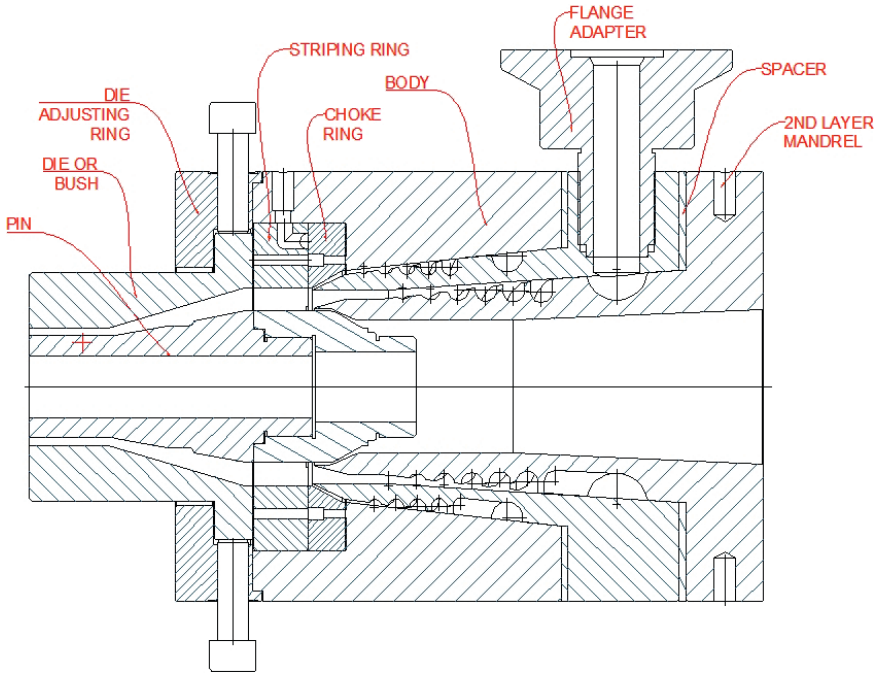

Figure 12.12 Drawing of second layer distributor in place

Figure 12.12 shows the second layer distributor, a side-fed spiral mandrel fitted inside the first layer mandrel, in relation to other parts. Like all side-fed spiral distributors, the molten material from the extruder is delivered to a circular ring on the mandrel, which feeds the spirals. As explained previously, there is an odd number of feed ports and spirals for an even distribution of the melt. This being the main distributor in the die, the number of ports and spirals is seven, and there are six overlaps, which means that each spiral goes around about 86% of the circumference of the mandrel. As has been previously reiterated, there are three parts of the die geometry to be detailed: the feed section, the distribution section, and the tooling section. The geometry of the three sections is defined separately, as follows:

12.4.3.1.1 Distribution Section

This section consists of the outer part, which in this case is the inside of the first layer spiral mandrel, the spiral mandrel for this layer, and the geometry of the spirals. The general arrangement of the geometry is shown in Figure 12.12, but for the sake of clarity, the geometry of the inside of the first layer mandrel and the second layer mandrel and spirals are shown separately in Figure 12.13 and Figure 12.14.

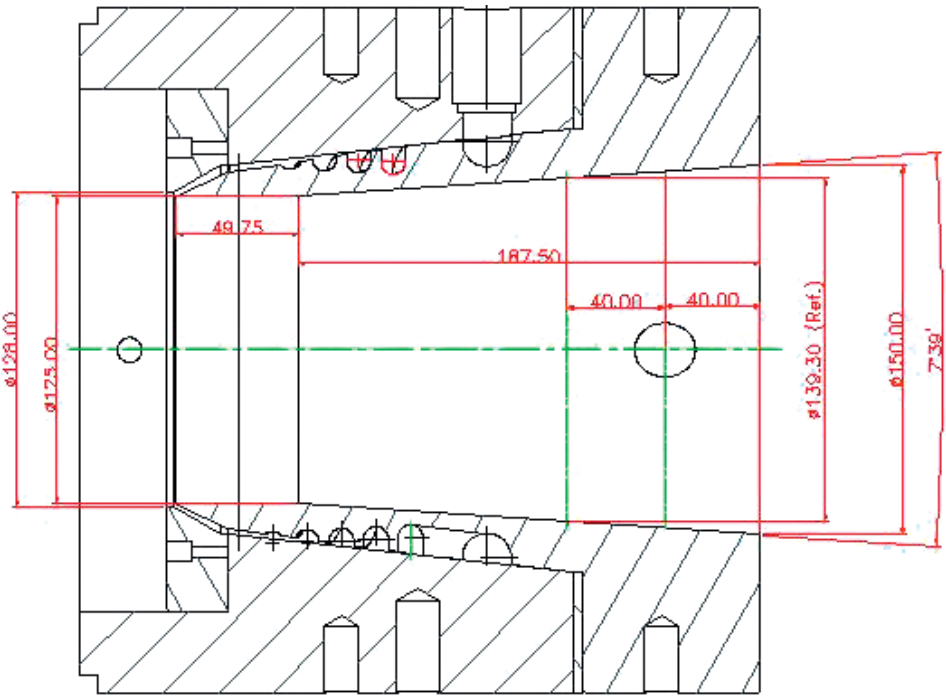

Figure 12.13 Dimensions of inside of first layer mandrel

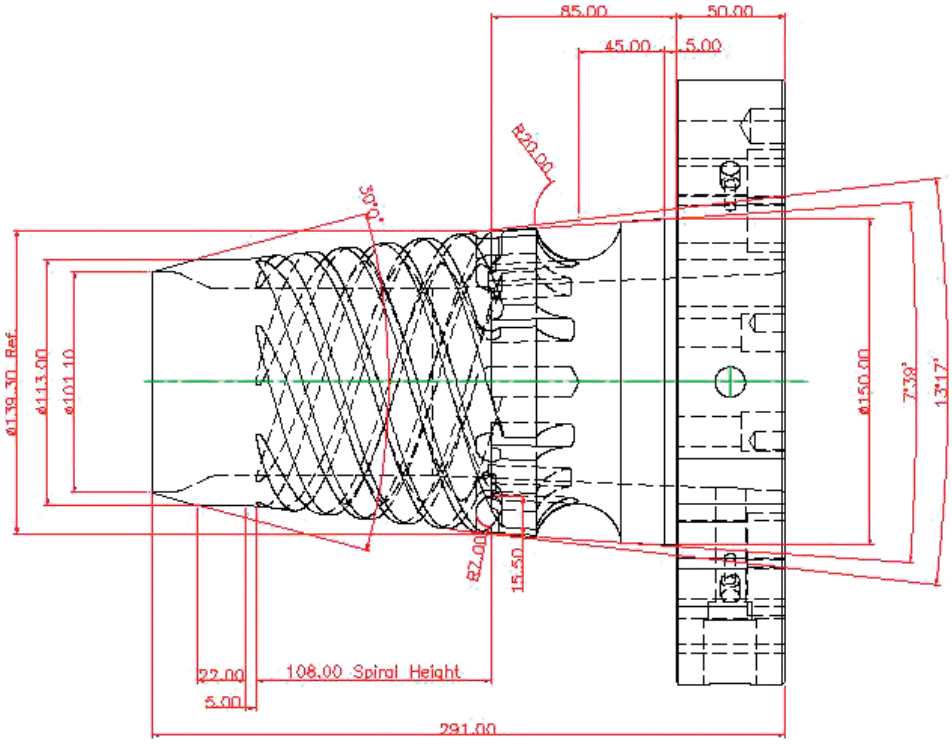

Figure 12.14 Dimensions of second layer mandrel

The combination of the dimensions of the inside of the first layer mandrel, the outside dimensions of the second layer mandrel, and the dimensions of the spirals of the second layer make up for the total dimensions of the second layer distributor. The summary of the dimensions of the distributor section (for the simulation of the flow) is given the table below.

12.4.3.1.2 Dimensions of Body, Mandrel, and Spirals of Layer 2

The dimensions of the body, mandrel, and spirals for the simulation are shown in Table 12.8.

Table 12.8 Dimensions of Body, Mandrel, and Spirals (Middle Layer)

1.	Reference diameter (diameter in the middle of the start of spirals)	139.30 mm
2.	Spiral height (distance from the middle of the start of spirals to the end of spirals)	108.00 mm
3.	Diameter at the end of the body (inside of first layer mandrel)	125.00 mm
4.	Diameter of mandrel at the end of spirals	113.00 mm
5.	Gap between the mandrel and the body at the start of spirals	0.025 mm

Table 12.8 Dimensions of Body, Mandrel, and Spirals (Middle Layer) *(continued)*

6.	Gap between the body and the mandrel at the end of the spirals	6.00 mm
7.	Number of spirals	7
8.	Number of feed ports	7
9.	Number of overlaps	6
10.	Radius at bottom of the spirals at the start	7.00 mm
11.	Depth of spirals at the start	15.00 mm
12.	Depth of spirals at the end	0.05 mm

As mentioned previously, this layer is the main layer, and the geometry of all three sections is considered for the simulation to get the variables. Having defined the distributor or spiral mandrel as above, the next section is the tooling section or the section above the spirals. In this section, artificial lines are drawn to show the parts through which the materials of the outer layer and the inner layer are joining the middle layer. The dimensions of the tooling section used for the simulation of the flow characteristics are shown in Figure 12.15 and Table 12.9 contains a summary of these dimensions.

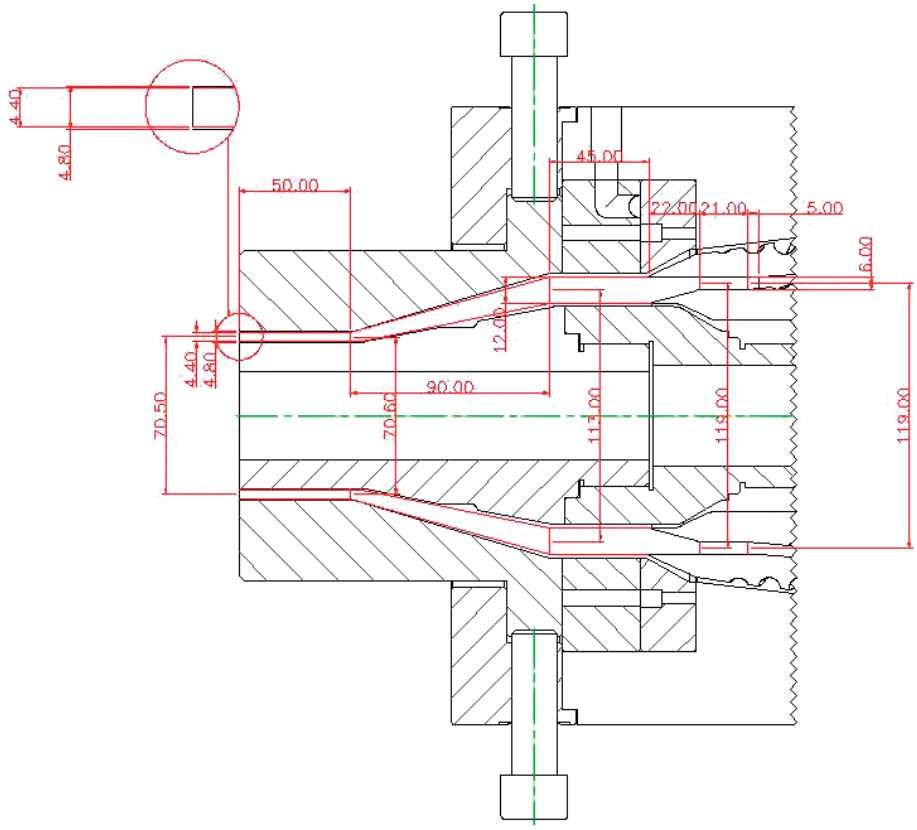

Figure 12.15 Dimensions of tooling section above the spirals of second layer

12.4.3.1.3 Dimensions of Section above the Spirals of Second Layer

The dimensions of the section above the spirals of the second layer are shown in Table 12.9.

Table 12.9 Dimensions of Section above the Spirals of Second Layer

	Mean diameter at the end of section [mm]	Total height from start [mm]	Height of section [mm]	Gap at the beginning [mm]	Gap at the end [mm]
1.	119.00	5.00	5.00	6.00	6.00
2.	119.00	26.00	21.00	6.00	6.00
3.	113.00	48.00	22.00	6.00	12.00
4.	113.00	93.00	45.00	12.00	12.00
5.	70.50	183.00	90.00	12.00	4.40
6.	70.50	233.00	50.00	4.40	4.40

12.4.3.1.4 Feed Section

The last section is the feed section, which is further divided into two sections for convenience of the simulation. Part one is the straight section from the extruder flange to the circular ring on the mandrel and the connection of the ports to the ring. The second part, simulated separately, is the diameter of the ring and the width of the port, which varies according to the position of the port from the feed to the ring. In the first part, the width of the ports is taken to be the same for all the ports, and in the second part of the simulation the width of each port is defined according to its distance from the feed. The two parts of the feed section are shown in Figure 12.16.

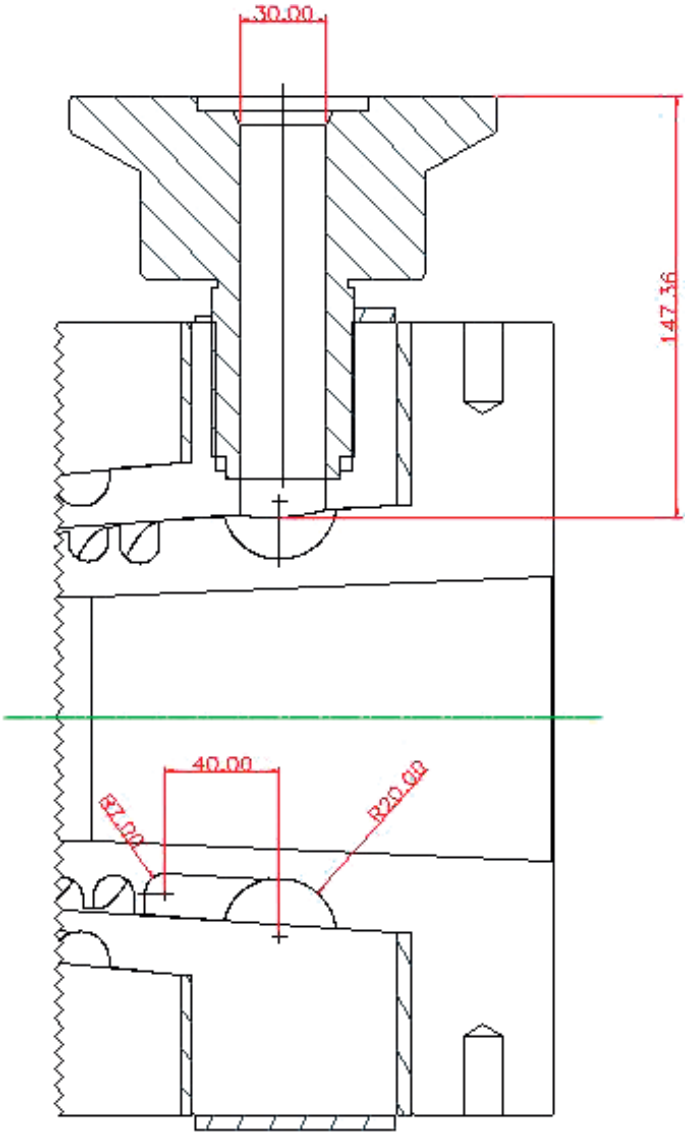

Figure 12.16 Feed section of second layer

The summary of the dimensions from Figure 12.16 is shown in Table 12.10.

Table 12.10 Dimensions of Feed Section (Middle Layer)

#	No. of sections	Length L [mm]	L/D	Diameter ⌀ [mm]	Cross section area [mm^2]
1.	1	147.50	3.69	30.00	706.86
2.	7	40.00	2.86	14.00	153.94

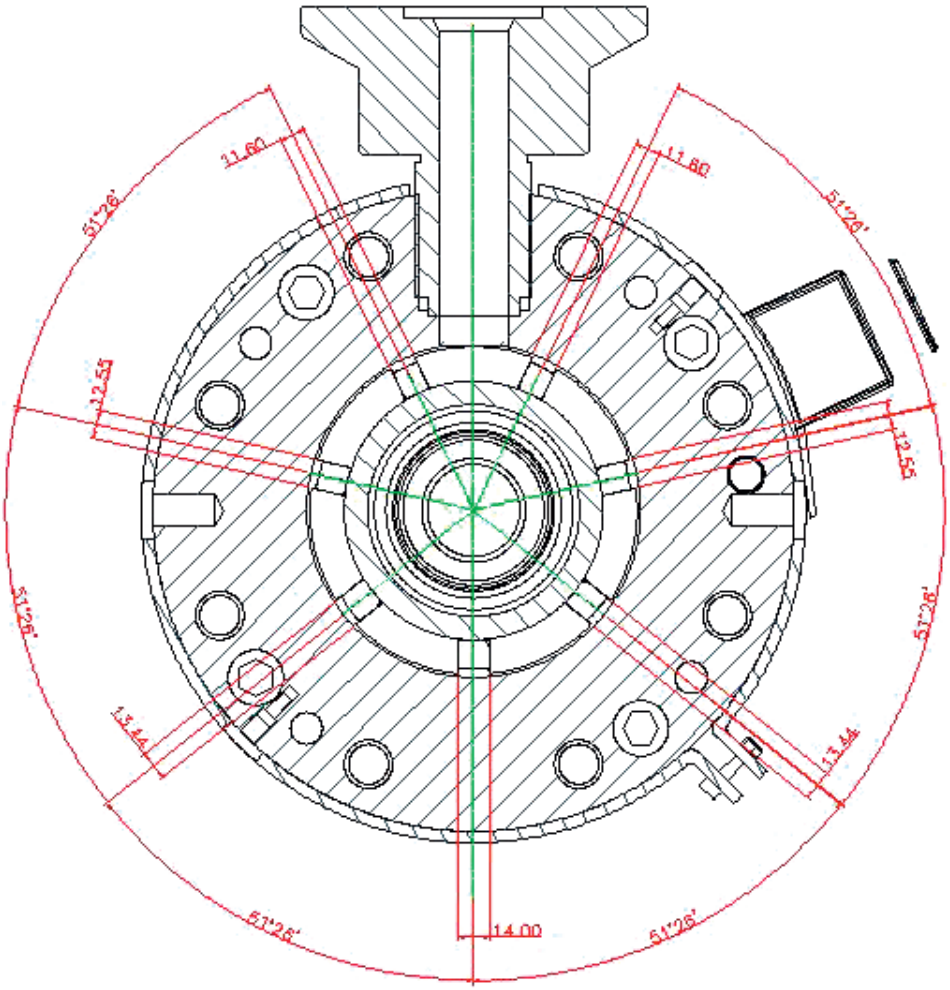

Figure 12.17 Dimension of the ports in relation to feed to the ring

12.4.3.1.5 Dimensions of the Feed Ports of Middle Layer

In Figure 12.17, it can be seen that a ∅30 mm feed from the extruder is feeding the ring, which has the equivalent dimensions to ∅30 mm, and there is one port directly opposite the feed point. The port opposite the feed point is 14.00 mm wide, the second set of ports on both sides of this one are 13.44 mm wide, the next set of ports after those is 12.55 mm wide, and, finally, the two ports near the feed point are the smallest ports, 11.60 mm wide. It has been explained previously that for small dies the difference in the area of rectangular ports and round ports is so small that it does not make much difference to the balance of the flow. Therefore, these minor differences are ignored. Rectangular ports with a semicircular bottom are easier to machine, and in practice, than round holes.

Now the geometry of all the parts of the middle layer is defined. Adding the processing conditions to this geometry in the simulation software will give the flow variables. Therefore, now the processing conditions for this layer are given below:

12.4.3.1.6 Processing Conditions for Middle Layer

- Die body temperature: 220 °C
- Material: HDPE – BP grade PC4014
- Melt flow rate: 500 kg/h
- Melt temperature: 220 °C

The processing conditions, when linked to the above geometry, give the following flow variables in all three sections as described above.

12.4.3.1.7 Melt Variables Noted from the Software

The melt variables noted from the software are shown in Table 12.11.

Table 12.11 Summary of Melt Flow Variables in the Middle Layer

	Pressure drop [MPa]	Shear rate [s^{-1}]	Shear stress [kPa]
1. Feed section a. Flange adapter to feed ring	1.94	68.56	98.77
b. Branches connecting feed ring to spirals	1.32	100.28	115.46
2. Spiral section	6.65	137.05 (max.)	127.15 (max.)
3. Section above the spirals to die exit	6.56	242.50 (max.)	141.27 (max.)

- Total pressure drop: 16.47 MPa
- Average flow rate in the spiral section: 2.104 $cm^3/s \pm 5.43\,\%$
- Average flow rate above the spirals to the main melt stream: 2.104 $cm^3/s \pm 0.07\,\%$

The values of shear rate and shear stress in the spiral section and the section above the spirals vary at different points through these sections and only the maximum values are given in Table 12.11. Care is taken in the design of the die that the shear stress does not exceed 140 kPa, because a shear stress above this value is likely to cause melt fracture. The maximum set value of pressure drop in the die is 20 MPa and, in this case, it is 16.47 MPa for the middle layer. The average flow rate variation at the end of the spiral section should be ± 4 % and in this case it is ± 5.43%, but at the die exit this variation is very small (± 0.07 %); therefore, the slightly higher variation at the end of the spiral is ignored for practical purposes.

12.4.4 Design of Third Layer (Inside Layer)

After the design of the outside layer and the second layer, the third layer is designed to fit inside the second layer. The third layer is for enhancing the inside finish of the product and it is very thin, only 0.25 mm to 0.40 mm, as shown in Table 12.2. Therefore, this layer is designed and simulated up to the point where it joins the main melt stream. The flow variables for this layer beyond that point are simulated using different software, as will be seen later in this chapter. Like in the second layer, the third layer distributor is designed to fit inside the second layer, and the melt from the distributor is made to blend into the tooling section, as shown in Figure 12.18 and Figure 12.19.

12.4.4.1 Third Layer Distributor

The pictorial view of the third layer fitted inside the second layer mandrel and its relationship to other parts is shown in Figure 12.18. The end of the mandrel is fitted to the pin carrier or mandrel extension, which is shaped to blend the melt from the mandrel into the main melt stream. The feed to the distributor is from the top of the die. The top part of the connector is deliberately turned 90° for the illustration. A 2D drawing view of all the layers nested together is shown in Figure 12.19 with the names of all the parts. The dimensions of the inside of the second layer and the third layer distributor are shown separately in Figure 12.20 and Figure 12.21.

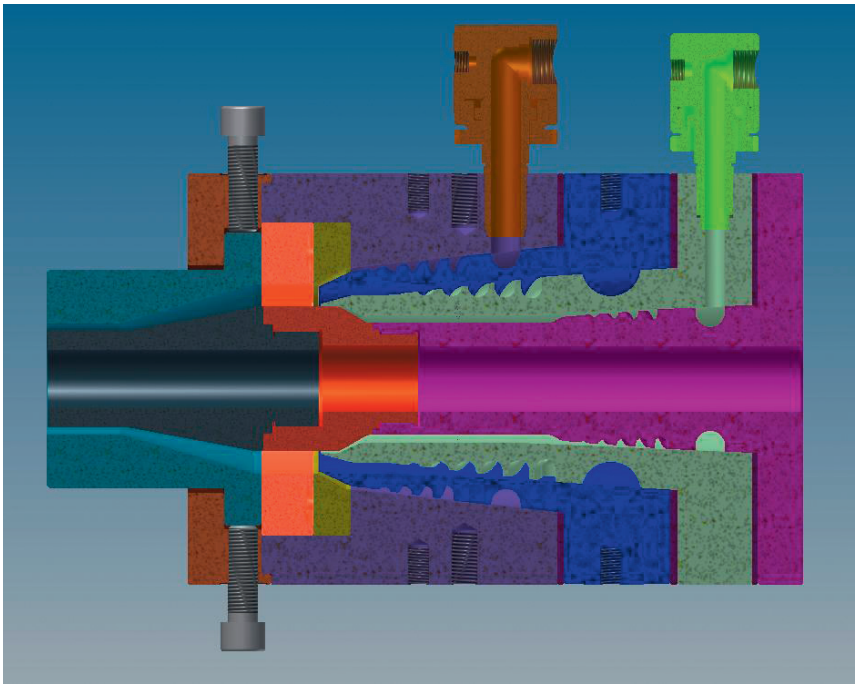

Figure 12.18 Third layer fitted inside second layer

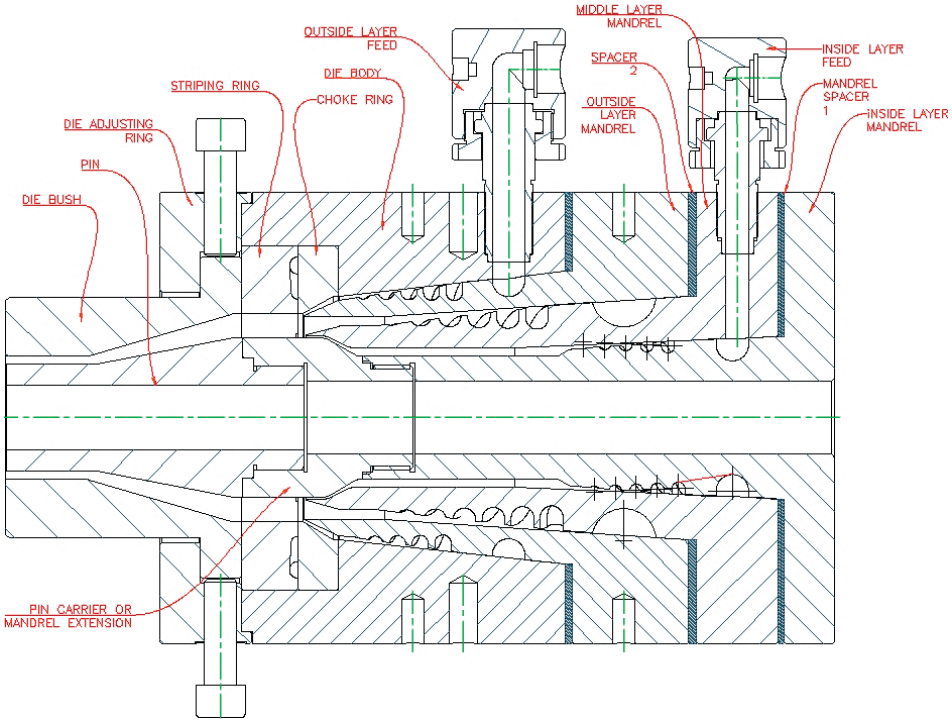

Figure 12.19 All three layers nested together

The views in Figure 12.18 and Figure 12.19 show the inside layer distributor fitted in the second layer mandrel. Since directing the melt from the inside layer to join the melt in the main stream in a one piece mandrel was not possible, the mandrel is split into two parts; the second piece at the end is named pin carrier or mandrel extension. As is evident from Figure 12.19, the inside layer mandrel is first fitted inside the second layer mandrel and the mandrel extension is fitted to it from the front. The dimensions of the inside of the second layer mandrel and the outside of the inner mandrel are shown in Figure 12.20 and Figure 12.21.

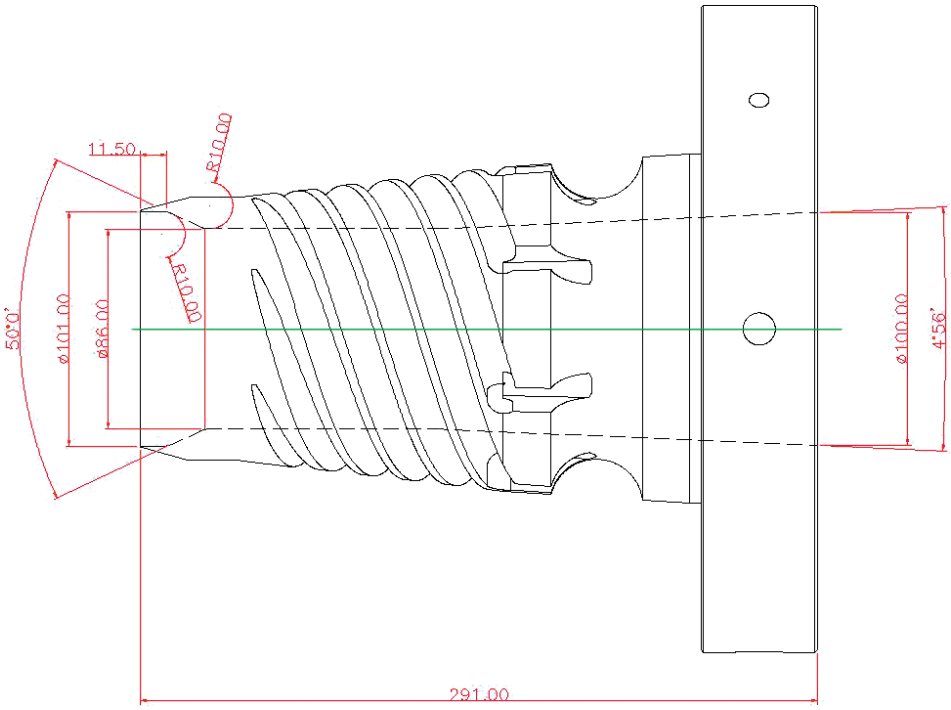

Figure 12.20 Inside dimensions of second layer mandrel

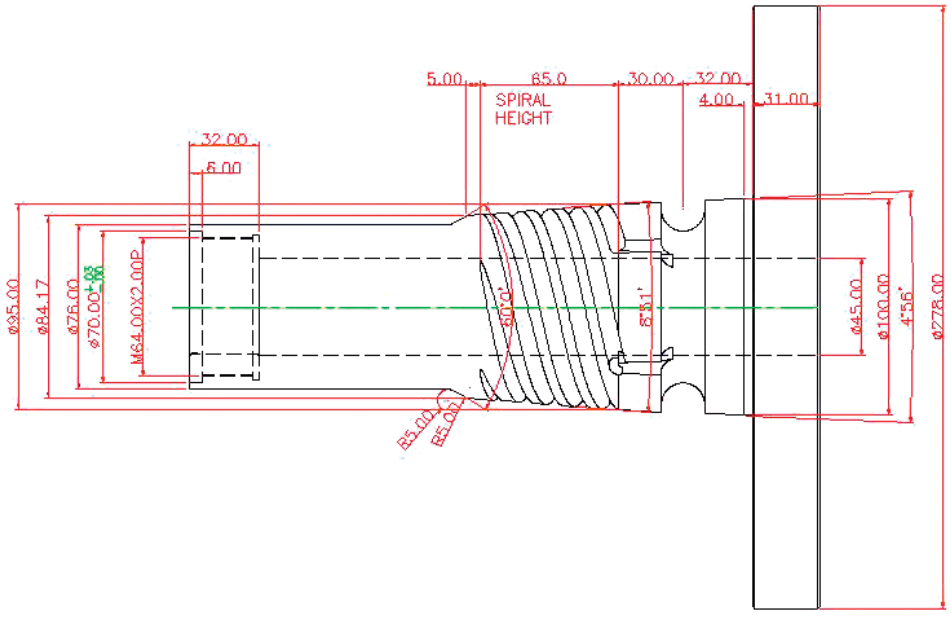

Figure 12.21 Outside dimensions of third layer mandrel

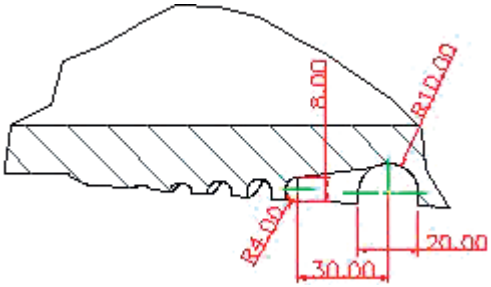

Figure 12.22 Dimensions of first feed port of third layer mandrel

The dimensions of the feed port of the spiral opposite the feed to the ring are shown in Figure 12.22 and the dimensions of the mandrel extension, which is also a part of the third layer melt flow, are shown in Figure 12.23. Before going any further, the dimensions of the main part of the distributor, which is the spiral section of the mandrel, can be summarized as follows:

12.4.4.1.1 Dimensions of Body, Mandrel, and Spirals of Layer 3

These dimensions are taken from Figure 12.20, Figure 12.21, and Figure 12.22, and they are shown in Table 12.12.

Table 12.12 Dimensions of Body, Mandrel, and Spirals

1.	Reference diameter (diameter in the middle of the start of spirals)	95.00 mm
2.	Spiral height (the distance from the middle of the start of spirals to the end of spirals)	65.00 mm
3.	Diameter at the end of the body (inside of second layer mandrel)	89.39 mm
4.	Diameter of mandrel at the end of spirals	86.52 mm
5.	Gap between the mandrel and the body at the start of spirals	0.025 mm
6.	Gap between the body and the mandrel at the end of spirals	2.20 mm
7.	Number of spirals	5
8.	Number of feed ports	5
9.	Number of overlaps	5
10.	Radius at bottom of the spirals at the start	4.00 mm
11.	Depth of spirals at the start	8.00 mm
12.	Depth of spirals at the end	0.05 mm

To complete the dimensions of the distribution section, the dimensions above the spirals also have to be defined. These dimensions are shown in Figure 12.23.

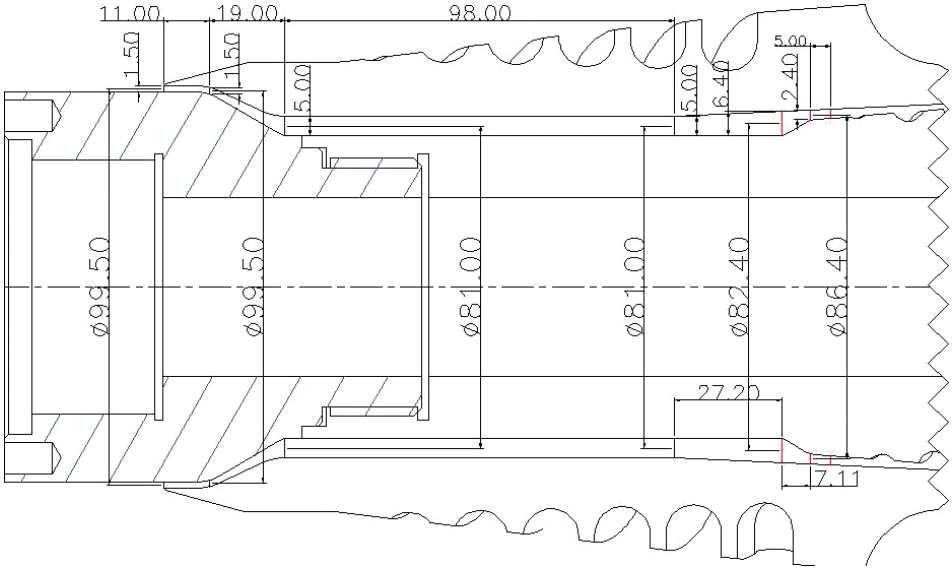

Figure 12.23 Dimensions of the section above the spirals

12.4.4.1.2 Dimensions of Section above the Spirals of Third Layer

The dimensions of the section above the spirals of the third layer are shown in Table 12.13.

Table 12.13 Dimensions of Section above the Spirals of Third Layer

	Mean diameter at the end of section [mm]	Total height from start [mm]	Height of section [mm]	Gap at the beginning [mm]	Gap at the end [mm]
1.	86.40	5.00	5.00	2.40	2.40
2.	82.40	12.11	7.11	2.40	6.40
3.	81.00	39.31	27.20	6.40	5.00
4.	81.00	137.31	98.00	5.00	5.00
5.	99.50	156.31	19.00	5.00	1.25
6.	99.50	167.31	11.00	1.25	1.25

12.4.4.1.3 Feed Section

Finally, the dimensions of the material feed from the extruder to the spiral mandrel are defined as follows. As stated in the previous sections, this section has 1 tube of 20 mm in diameter and, for simplicity, only a 100 mm length is considered. This feeds the melt into a circular ring of 20 mm width, from which 5 slots of 8 mm width are connected to 5 spirals.

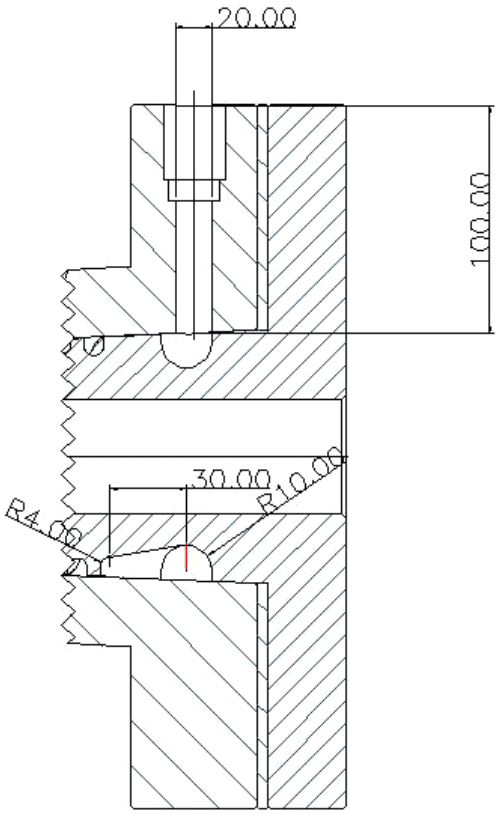

Figure 12.24 Dimensions of the feed section

Table 12.14 Summary of Dimensions from Figure 12.24

#	No. of sections	Length L [mm]	L/D	Diameter ⌀ [mm]	Cross section area [mm²]
1.	1	100	5.00	20.00	314.159
2.	5	30.00	3.75	8.00	50.20

The width of the slots connecting to the spirals, as shown before, has been simulated and the first two slots closer to the feed are 6.60 mm wide, the next two slots are 7.37 mm wide, and the slot opposite the feed is 8.00 mm wide.

12.4.4.1.4 Processing Conditions for Inside Layer

The processing conditions for the inside layer are as follows:

- Die body temperature: 220 °C
- Material: HDPE silica modified
- Melt flow rate: 58.69 kg/h
- Melt temperature: 220 °C

The above processing conditions are linked with the geometry of the inside layer as described above, and the following variables in the three sections (i.e., feed, distribution, and section above the spirals) are obtained from the software.

12.4.4.1.5 Important Melt Variables Obtained from the Software for the Inside Layer of the Die

Table 12.15 Melt Flow Variables of the Inside Layer

	Pressure drop [MPa]	Shear rate [s^{-1}]	Shear stress [kPa]
1. Feed section a. Flange adapter to feed ring	0.896	28.029	44.75
b. Branches connecting feed ring to spirals	1.096	89.90	73.02
2. Spiral section	8.21	168.20 (max.)	104.94 (max.)
3. Section above the spirals to die exit	4.75	245.30 (max.)	119.92 (max.)

- Total pressure drop: 14.94 MPa
- Average flow rate in the spiral section: 0.3386 $cm^3/s \pm 3.42\%$
- Average flow rate above the spirals to the main melt stream: 0.3386 $cm^3/s \pm 0.04\%$

It is important to note from the above variables that the total pressure drop through the feed section does not exceed 20 MPa, the shear stress is not above 140 kPa, and the flow variation is not more than ± 4 %. From the results it can also be seen that a moderate pressure drop of 14.94 MPa through the whole inside layer means that some of the pressure drop will result from the flow of melt in the main stream of the three layers and some of the pressure drop will result from the flange connection from the extruder to the die. The overall results are satisfactory.

All the layers of the die have been simulated and the results above are quite within the set criteria. As the materials used in this case are all of the same classification—namely, HDPE with minor modifications—, interface variations as described in Chapter 10 are not shown here. To simulate the interface variations is a laborious exercise; therefore, it is only carried out when different materials of quite different properties are used to make the final multilayer product. Minor differences in the flow variations of different materials are adjusted by varying the processing conditions.

The design of a 3-layer die for cable ducting is described above and the same principles of design can be applied to 3-layer dies for other applications. The design of the striping mechanism has been demonstrated in the previous chapter. Therefore, this completes the design of the 3-layer die.

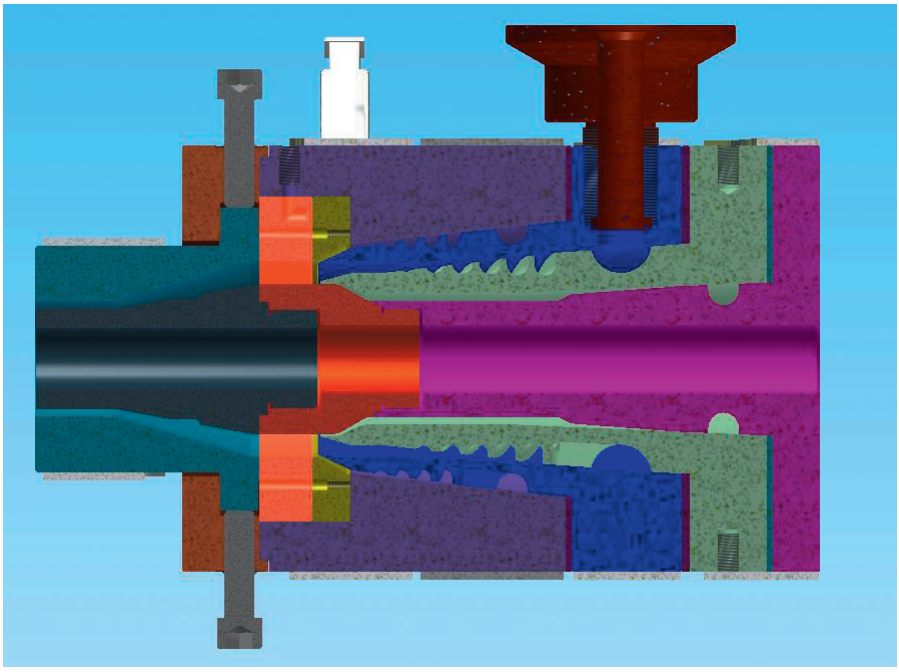

Figure 12.25 Section of complete die showing main layer feed

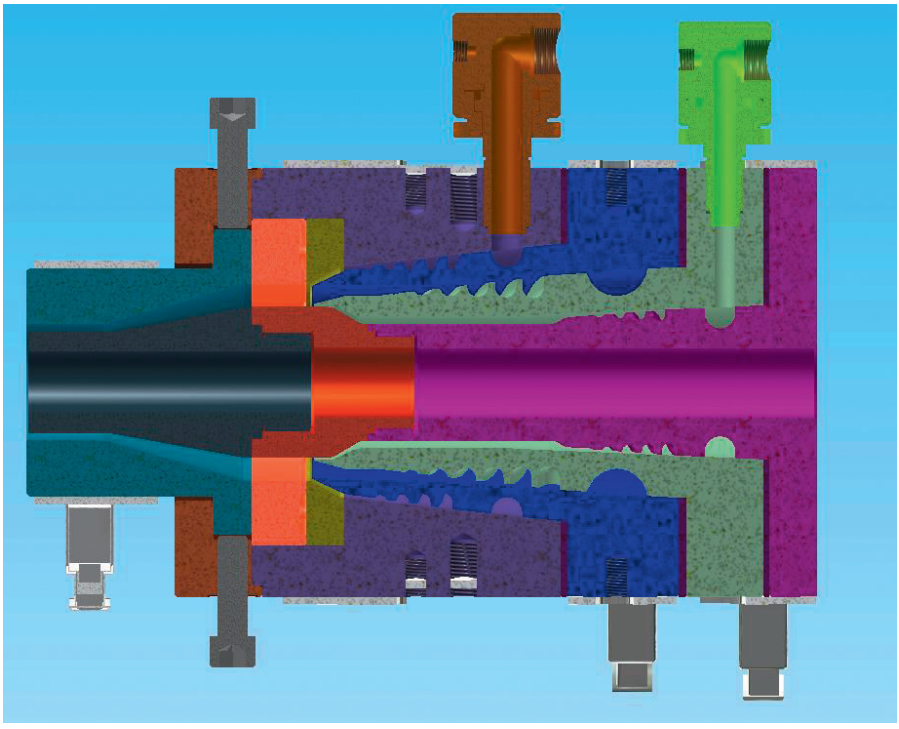

Figure 12.26 Section of complete die showing first and third layer feed

13 Three-Layer-Plus-Striping Die for ∅25 mm to ∅110 mm Pipes

The design of a 3-layer crosshead die for cable ducting was illustrated in Chapter 12. As the die had all the feed ports arranged on the sides and the middle of the die was hollowed out for passing a rope or a conductor, such die design can also be adapted for coating on pipes, cables, etc. The inside layer for that die was a thin layer of silicon-modified HDPE in order to give a smoother finish to the inside of the pipes, for passing cables or conductors through the pipe without causing any damage to the media being passed through the pipe.

Here the design of a similar die is illustrated, with the difference that, instead of a hollow middle, the die has a small hole for the passing of air through the die. The die is designed for conveying corrosive chemical liquids, which would normally attack the monolayer HDPE pipes. HDPE is the most preferred material for the extrusion of pipes for many applications due to its well-balanced properties, such as low cost, easy processability, excellent chemical resistance, toughness and flexibility even at low temperatures, freedom from odor and toxicity, etc. It still has weaknesses for some of the fluids, such as petrochemicals, highly chlorinated water, and many other chemicals.

Therefore, the inside layer is made from plastic materials that are non-reactive to such chemicals. Plastic materials such as polyamide, polyvinylidene difluoride (PVDF), or ethylene vinyl alcohol (EVOH) are used as a barrier layer for such fluids. These barrier materials are very costly compared with HDPE. Hence, it is not economically viable to use these materials as a single layer product for such purposes, and a thin layer of these materials (0.2 mm to 0.5 mm) as the inside layer of relatively cheaper HDPE is used. Some of these non-reactive materials lack adhesion to HDPE; therefore, a further layer of another polymer (0.10 mm to 0.20 mm) is introduced as a sealant between HDPE and the non-reactive material. Normally, the material used as a tie between HDPE and barrier materials is ethylene vinyl acetate (EVA). Hence, the three layers of these special pipes for chemical fluids are made of HDPE as the outer layer, EVA as the middle layer (tie layer), and nylon, PVDF, or EVOH as the non-reactive or barrier layer. The die under consideration is designed so that all three layers of the different materials are brought together in

the die to form one complete product. As explained in the previous chapters, the starting point of the die design is to define the design parameters and this is described as project or design brief.

13.1 Design Brief

The information regarding the product to be manufactured, materials to be used, processing conditions, and equipment to be used is defined in Table 13.1.

Table 13.1 Design Brief

1.	Product	3-layer pipes with or without stripes.
2.	Product range	Pipes of outside diameters 25 mm to 110 mm.
3.	Wall thicknesses	Standard wall thicknesses of SDR 11 as shown in Table 13.2.
4.	Materials used	Outside layer of P100 HDPE, tie layer of EVA or LDPE, and inside layer of PVDF, PA 12, or EVOH of a given grade.
5.	Rheology data and thermodynamic properties	Existing rheology data and thermodynamic properties of all the materials are used.
6.	Extruders	Main extruder for HDPE has plasticizing capacity of 300 kg/h and is situated on the left of the line; middle layer ∅25 mm extruder of 25 kg/h capacity is situated on the right hand side of the line; and inside layer ∅32 mm extruder of 40 kg/h capacity is aligned with the direction of the line. The striping extruder has ∅20 mm and is placed on the right hand side of the die.

13.2 Product and Tooling Sizes

For standard pipes of ∅25 mm to ∅110 mm, the pipe sizes are detailed and the tooling sizes are calculated using the adequate draw down ratios, as shown in Table 13.2.

Table 13.2 Draw Down Ratios and Tooling Sizes

	1	2	3	4	5	6	7	8	9
	3-layer pipe size	Pipe OD [mm]	Pipe ID [mm]	Wall thick-ness [mm]	Die ID [mm]	Pin OD [mm]	DDR	Mate-rial thick-ness at die exit or gap [mm]	Land length [mm]
1	25 mm								
	Overall	25.00	20.45	2.27	37.50	30.59	2.25	3.405	35
	Layer 1	25.00	21.06	1.97	37.50	31.59	2.25		
	Layer 2	21.06	20.86	0.10	31.59	31.29	2.25		
	Layer 3	20.86	20.46	0.20	31.29	30.69	2.25		
2	32 mm								
	Overall	32.00	26.18	2.91	44.80	36.65	1.96	4.07	49
	Layer 1	32.00	26.78	2.61	44.80	37.49	1.96		
	Layer 2	26.78	26.58	0.10	37.49	37.21	1.96		
	Layer 3	26.58	26.18	0.20	37.21	36.65	1.96		
3	50 mm								
	Overall	50.00	40.90	4.55	60.00	49.08	1.44	5.46	66
	Layer 1	50.00	41.50	4.25	60.00	49.80	1.44		
	Layer 2	41.25	41.30	0.10	49.80	49.56	1.44		
	Layer 3	41.30	40.90	0.20	49.56	49.08	1.44		
4	63 mm								
	Overall	63.00	51.55	5.73	75.60	61.85	1.44	6.88	83
	Layer 1	63.00	52.15	5.43	75.60	62.57	1.44		
	Layer 2	52.15	51.95	0.10	62.57	62.33	1.44		
	Layer 3	51.95	51.55	0.20	62.33	61.85	1.44		
5	90 mm								
	Overall	90.00	73.64	8.18	108.00	88.36	1.44	9.82	98
	Layer 1	90.00	74.24	7.88	108.00	89.08	1.44		
	Layer 2	74.24	74.04	0.10	89.08	88.84	1.44		
	Layer 3	74.04	73.64	0.20	88.84	88.36	1.44		
6	110 mm								
	Overall	110.00	90.00	10.00	121.00	99.00	1.21	11.00	115.50
	Layer 1	110.00	90.30	9.70	121.00	99.66	1.21	10.67	
	Layer 2	90.60	90.40	0.10	99.66	99.44	1.21	0.11	
	Layer 3	90.40	90.00	0.20	99.44	99.00	1.21	0.22	

Table 13.2 shows the dimensions of 3 pipes of a range from ⌀25.00 mm to ⌀110.00 mm. Using a SDR 11, the wall thicknesses of the pipes are calculated by dividing the outside diameter (OD) of the pipe by a factor of 11; in this case, an OD of 110 mm divided by 11 gives a wall thickness of 10 mm. Therefore, the inside diameter of the pipe is 90 mm. For the 3 layers in this case, the inside layer is made of a 0.20 mm wall thickness and the middle (tie) layer has a 0.10 mm wall thickness in all cases.

In the item 4 of the design brief (Table 13.1) it was stated that the outside layer of the pipe is made of HDPE, the tie layer is made of EVA, and the inside layer is made of PVDF. The inside layer of PVDF is the barrier layer and the minimum thickness requirement is 0.20 mm. The middle layer is joining the two materials together; therefore, the minimum thickness for this layer is 0.10 mm. Using these two wall thickness values, the inside diameters of all the layers are calculated as shown in column 3 in Table 13.2. In columns 5 and 6, the inside diameter of the die and the outside diameter of the pin are calculated by using the factor of the draw down ratios. The largest inside diameter of the die and the smallest outside diameter of the pin in each set of calculations are used for the tooling sizes, as will be seen later. Column 8 gives the material thickness at the die exit or the gap between the inside diameter of the die and the outside diameter of the pin. The land length given is 10–15 times the die gap. Theoretical diameters of the layers are used for the calculations of the material output ratios, as shown in Table 13.3, and these figures are also used for the design of other layers and gaps between the layers.

13.3 Output Calculations for Different Pipe Sizes

The maximum output from the main layer extruder is 500 kg/h, which is based on the largest size pipe in the range. The outputs of the other two extruders are determined from the output of the main layer, so that the resultant line speed of all the layers is the same. The detailed information of the calculations is given in Table 13.3.

Table 13.3 Output Calculations for Different Pipe Sizes

1	2	3	4	5	6	7	8	9	10	11
Tube size	Layer	Material output for main extruder [kg/h]	Output of secondary extruder [kg/h]	Material density [kg/m^3]	Output volume [m^3/h]	Tube OD [mm]	Tube ID [mm]	Cross section area [mm^2]	Length of pipe per hour [m/h]	Length of pipe per min. [m/min]
25/20.50	Outer layer	150	–	952	0.157563	25.00	21.06	142.53	1105	18.42
	Middle layer	–	6.70	920	0.007276	21.06	20.86	6.59	1105	18.42
	Inside layer	–	17.22	1200	0.01434	20.86	20.46	12.98	1105	18.42
32/26	Outer layer	200	–	952	0.21008	32.00	26.78	241	872	14.53
	Middle layer	–	6.72	920	0.007309	26.78	26.58	8.38	872	14.53
	Inside layer	–	17.34	1200	0.01445	26.58	26.18	16.58	872	14.53
50/41	Outer layer	260	–	952	0.2731	50.00	41.50	611	447	7.45
	Middle layer	–	5.35	920	0.00581	41.50	41.30	13	447	7.45
	Inside layer	–	13.84	1200	0.01153	41.30	40.90	25.8	447	7.45
63/51.5	Outer layer	280	–	952	0.2941	63.00	52.15	981	300	5.00
	Middle layer	–	4.51	920	0.00490	52.15	51.95	16.35	300	5.00
	Inside layer	–	11.70	1200	0.009746	51.95	51.55	32.52	300	5.00
90/76.8	Outer layer	300	–	952	0.3151	90.00	74.24	2033	155	2.58
	Middle layer	–	3.32	920	0.003	74.24	74.04	23.29	155	2.58
	Inside layer	–	8.63	1200	0.007191	74.04	73.64	46.4	155	2.58
110/90	Outer layer	300	–	952	0.315126	110.00	90.60	3056	103	1.72
	Middle layer	–	2.70	920	0.002928	90.60	90.40	28.43	103	1.72
	Inside layer	–	7.00	1200	0.005837	90.40	90.00	56.67	103	1.72

The calculations of the output in Table 13.3 are used for deciding the sizes of the extruders required for the line, because too large extruders are expensive and cost more to run. Besides, if the extruder is too large for the required output, then it has more materials stagnant in the system, which are most likely to degrade in many instances. The other information given in Table 13.3 is the line speed, which would determine the adequacy of the take up equipment—namely, the cooling tanks, haul-off, saw, and winding equipment if used. The output values extracted from Table 13.3 will be used for the simulation of the flow variables for the multiple layers.

13.4 Design of 3-Layer Die Head for Pipes ∅25 mm to ∅110 mm

As before, the design of the die starts with the design of the tooling part. The largest size of the pipe to be produced has a 110 mm diameter; therefore, the tooling for this pipe is designed first and then the tooling for the smallest size (i.e., ∅25 mm) is designed to compare the geometry of both tooling sections. See Figure 13.1 and Figure 13.2. Thereafter, the process of designing is the same as detailed in the previous chapters. In this case, the outside layer being the main layer, the body and the main mandrel are designed to link with the tooling, and the mandrels for the other layers are designed and fitted into the main mandrel next. This is followed by the feed sections to all the layers and the rest of the parts are fitted to the die to complete the design, as shown step by step below.

13.4.1 Tooling Section

Taking the calculated diameters of the die and pin for the pipe size ∅110 mm from columns 5 and 6 in Table 13.2, the pin and die are designed as shown in Figure 13.1. It should be noted that the ratio of the gap at the melt entering the die and pin to the die exit is approximately 1.6 to 1; normally, this ratio is 2–5 times the gap at the die exit. This low ratio is due to the large range of pipes being made from the same die head. The other important feature to note is that the angle of the converging section of the die is larger than 30° inclusive, which will compress the melt and squeeze it toward the die land so that the variation of the melt distribution at the die exit is minimal. This variation in the melt distribution will be shown in the simulation results at a later stage.

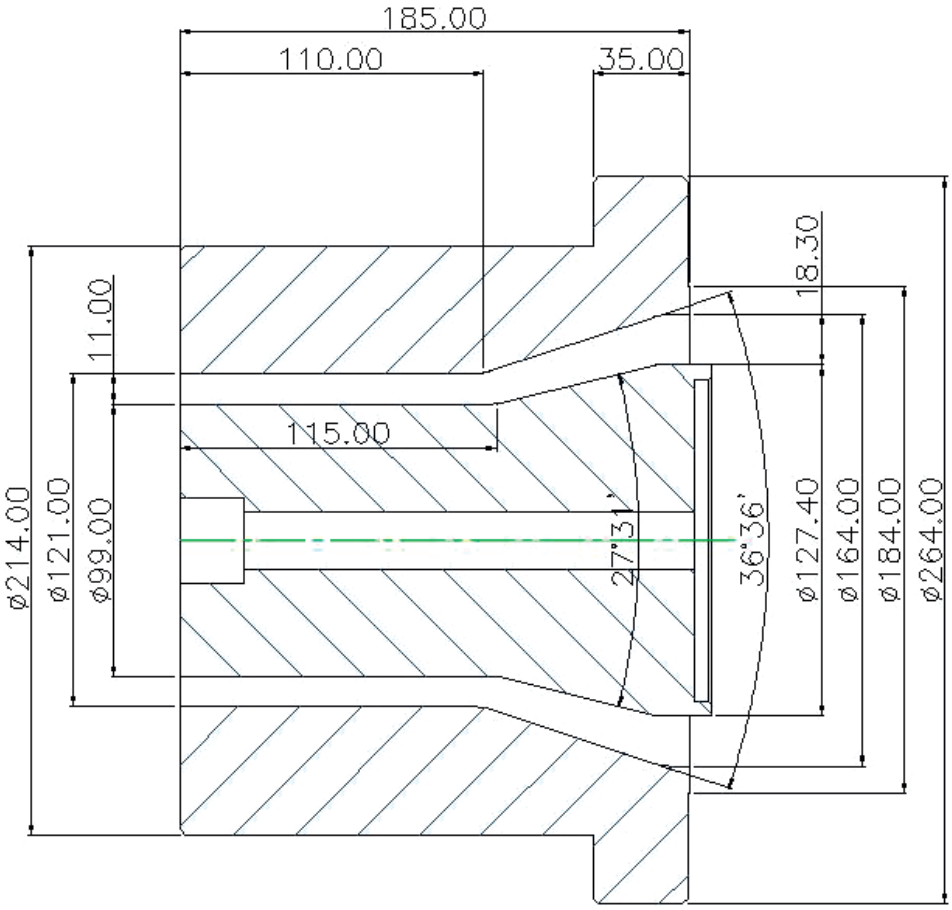

Figure 13.1 Die and pin design for ⌀110 mm pipe

Having designed the die and pin for the largest size of the pipe in the range, now the die and pin are designed for the smallest size of the pipe in the range, which is ⌀25 mm, as shown in Figure 13.2.

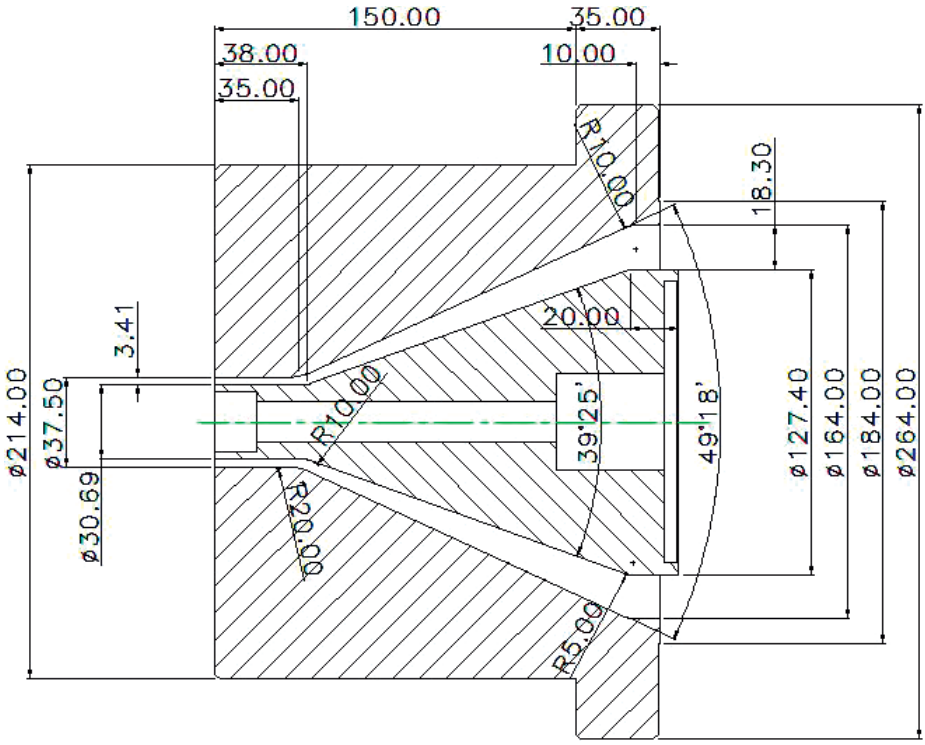

Figure 13.2 Die and pin design for ∅25 mm pipe

It is seen from Figure 13.2 that the ratio of the gap between the die and pin at the melt entrance to the die exit is just over 5:1, which is acceptable because the compression angle of the die is below 60°. Further fine tuning may be required on the simulation of the melt flow, which will be described later. The next stage is to add the die body and the main layer mandrel to the design of the die bush and pin, as shown below.

13.4.2 Body and Main Layer Mandrel

The main body and the outer mandrel are added to the die bush and pin designed above for ∅110 mm pipes as shown in Figure 13.3.

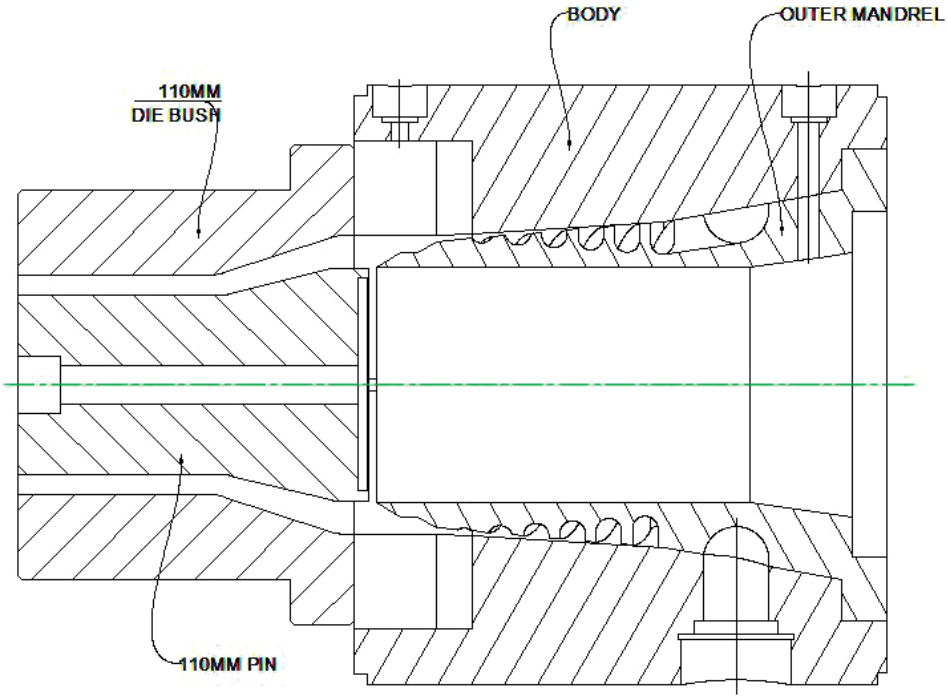

Figure 13.3 Body and mandrel added to pin and die

The body and the mandrel for the outer layer are added to the design of the pin and die. In the design of the body, provisions are made for adding striping rings and feed ports. The position of the extruder was given in the information in Section 13.1 (Design Brief). In Figure 13.3, the position of the feed ports for the outer layer is shown on the left, when looking in the direction of the melt flow, and the positions of the middle layer and the striping are shown on the right hand side of the line. The outside layer mandrel is fitted inside the body as shown. The outer layer mandrel is hollow in the middle to fit the mandrels for the other two layers, as will be shown later. The detailed dimensions of the body and the outer layer mandrel are shown in Figure 13.4 and Figure 13.5.

In Figure 13.5 the outer mandrel has 7 start spirals and 6 overlaps, which means that each spiral goes around the circumference through 308.57°. The depth of each spiral at the start is 18 mm and the radius at the bottom of the spiral is 7.00 mm, which means that the width of each spiral is 14.00 mm. The diameter of the mandrel at the middle of the start of the spirals is 179.25 mm and the height of the spirals is 120.00 mm. The feed to the spirals is from a circular groove, and the first spiral is opposite the feed and the other spirals are equally spaced around the circumference. This design information will be used for the simulation of the melt flow and any modifications, if necessary, will be made to these dimensions.

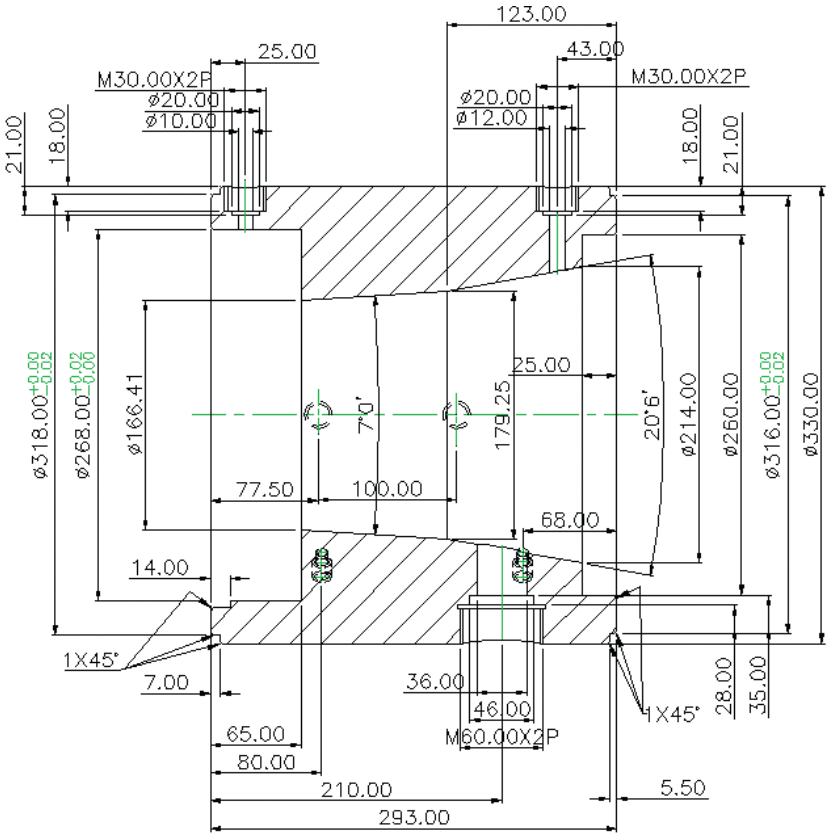

Figure 13.4 Detailed dimensions of body

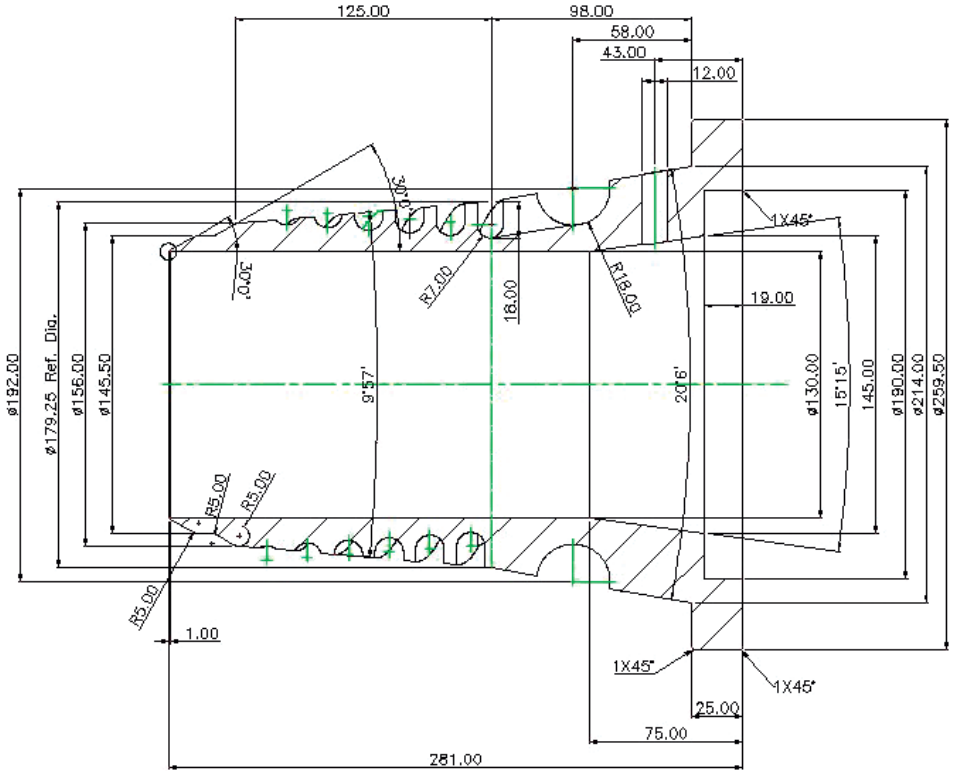

Figure 13.5 Detailed dimensions of outer layer mandrel

13.4.3 Middle Layer Mandrel

Having designed the body and the outer mandrel, the next stage is to design the middle layer mandrel to fit inside the outer layer mandrel. In this case, the outside surface of the middle layer is formed by the inside of the outer mandrel, and the inside of the middle layer is formed by the middle mandrel. The nesting of the middle mandrel in the die assembly is shown in Figure 13.6 and the details of the middle mandrel are shown in Figure 13.7.

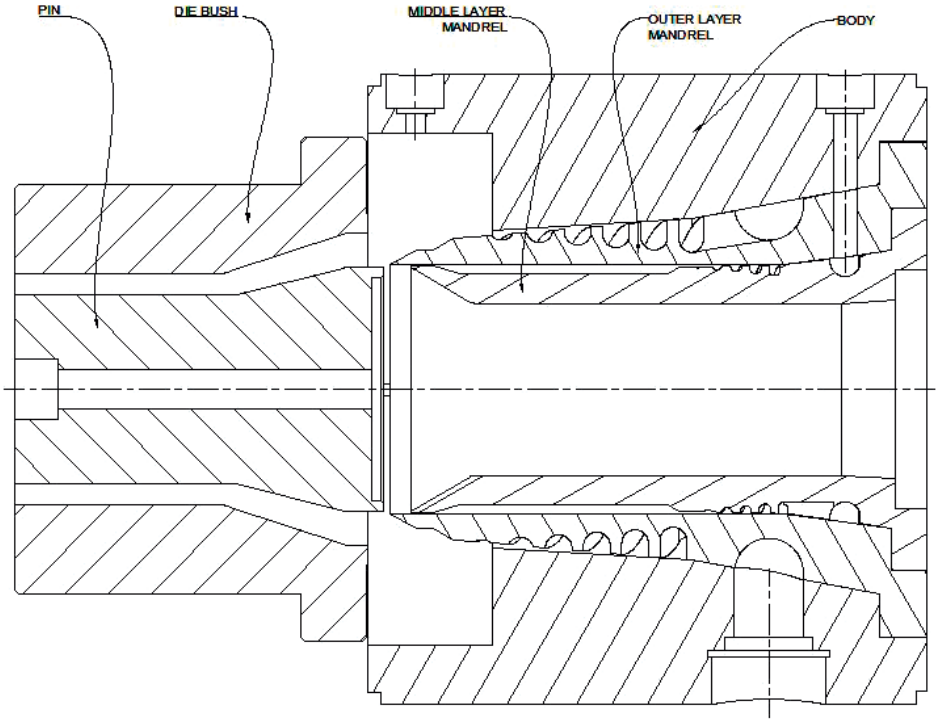

Figure 13.6 Arrangement showing middle mandrel inserted in the outer mandrel

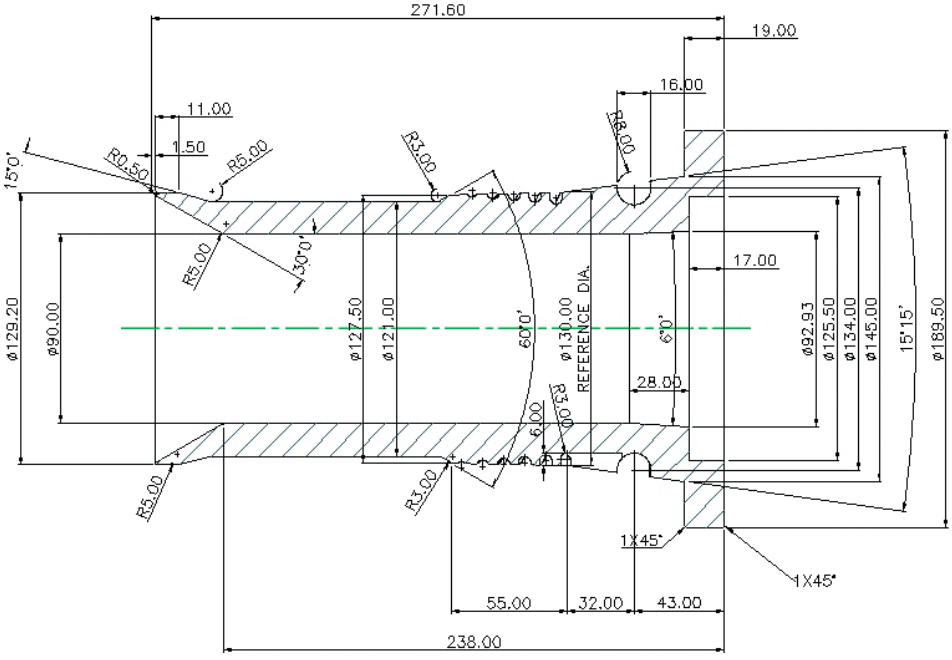

Figure 13.7 Details of middle mandrel

The middle mandrel shown in Figure 13.7 is designed to fit inside the outer layer mandrel as shown in Figure 13.6. The reference diameter of 130.00 mm is the diameter at a point in the middle of the start of the spirals. The geometry of the spirals on this mandrel is made to distribute a maximum of 10 kg/h, as the maximum output expected from this mandrel is 6.72 kg/h (as worked out in Table 13.3). There are five spirals on this mandrel and the first spiral starts from opposite the feed. There are five spirals and each spiral goes once around the circumference, hence there are five overlaps. The depth of each spiral at the start is 6.00 mm and it runs out to 0.05 mm at the end. The total spiral height is 50 mm. The radius at the bottom of each spiral is 3.00 mm at the start. This is essential information required for the simulation of the melt flow and any small adjustments, if necessary, are made to the geometry of the spirals after seeing the simulation results.

One of the features in the design of this mandrel is worth noting, and that is where the shape of the mandrel changes from ∅127.50 mm to ∅121.00 mm; this section of ∅121.00 mm is called relaxation zone. This section is designed so that all the stresses caused during the melt distribution in the spiral section are given time to relax before the melt is pushed into the small land area of ∅129.20 mm. The design of this section has to be such that the melt is not stagnant, but to save the consuming of pressure to push the melt through. From the simulation it will be seen that the shear rate in this area is more than 10 s^{-1} and the shear stress is relatively low, but not less than 30 kPa. A shear rate below 10 s^{-1} would cause stagnation and channeling in this area.

13.4.4 Inside Layer Mandrel

The third mandrel, for the inside layer, is designed and fitted inside the middle mandrel. The feed to this mandrel is from the extruder fitted on the back of the die and it is in line with the extrusion of the complete pipe. The fitting of this mandrel in the die head is shown in Figure 13.8 and the detailed dimensions of the mandrel are given in Figure 13.9.

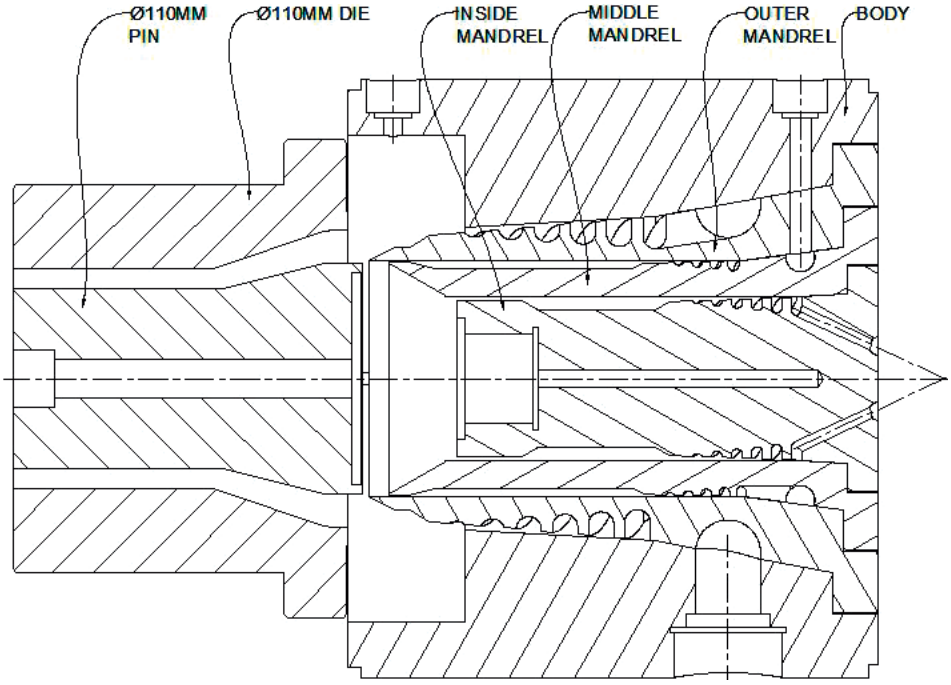

Figure 13.8 All mandrels and body with die and pin

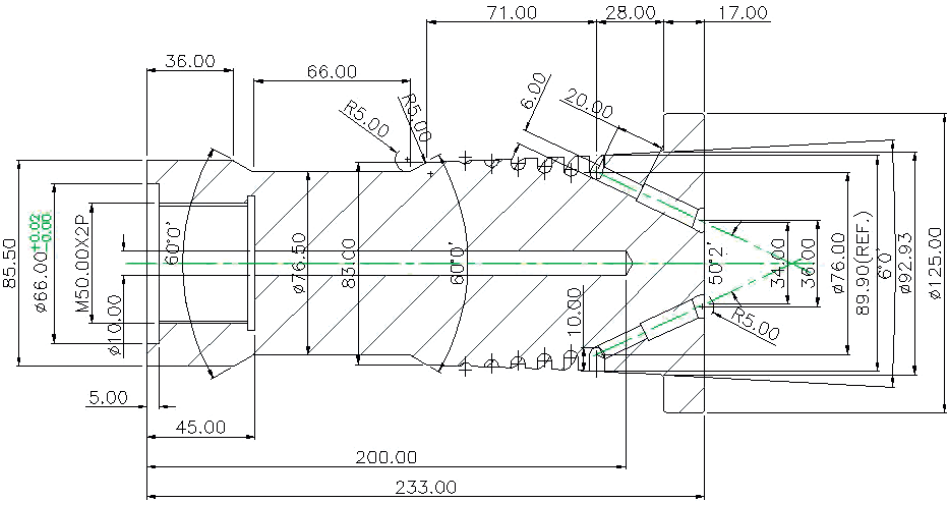

Figure 13.9 Detailed drawing of inside mandrel

The mandrel in Figure 13.9 for the inside layer is designed to fit inside the middle mandrel. The right hand side of the mandrel is designed to be connected to the feed from the inline extruder and the right hand side will be connected to the mandrel extension, which is also connected to the pin. The melt stream from the extruder flange adapter is divided in six channels, which feed the six spirals through angled holes, as shown in the drawing in Figure 13.9. The mandrel has six spirals and each spiral goes around the circumference through 360° over the spiral height of 66.00 mm, at which point the spiral depth is 0.05 mm. The depth of the spirals at the start is 10 mm at the reference diameter of 90.00 mm and the radius at the bottom of each spiral is 3.00 mm, which means that the spiral width at the start is 6.00 mm. The melt is distributed through six spirals and goes over 5 mm of the same angle as the spiral section of the mandrel before it goes into the relaxation section. Thereafter, the melt goes over the parallel land and then between the angled cavity formed by the inside of the middle mandrel and the mandrel extension, which will be shown in a later section. The parallel land on this mandrel and the angled section of the extension are designed so that the width of the end cavity can easily be changed to accommodate variations in the materials rheology and the output rates, if required.

13.4.5 Mandrel Extension

In the way the design of the die has been planned out, the inside mandrel has to be flared out at the front end to make the inside layer melt join the main stream. From a manufacturing point of view, the inside mandrel cannot be made to fit inside the middle layer mandrel. Therefore, it has to be split into two parts. The front part is called mandrel extension, to distinguish it from the main mandrel. It is a bridge between the inside layer mandrel and the pin. This part is further divided into two parts. Part A is the main part, which, once a satisfactory melt flow for the inside layer is achieved, becomes a permanent feature of the design. Part B can be changed to suit the pin for different sizes of the pipe, as will be seen in the case of a pin for ⌀25 mm pipes in Figure 13.13.

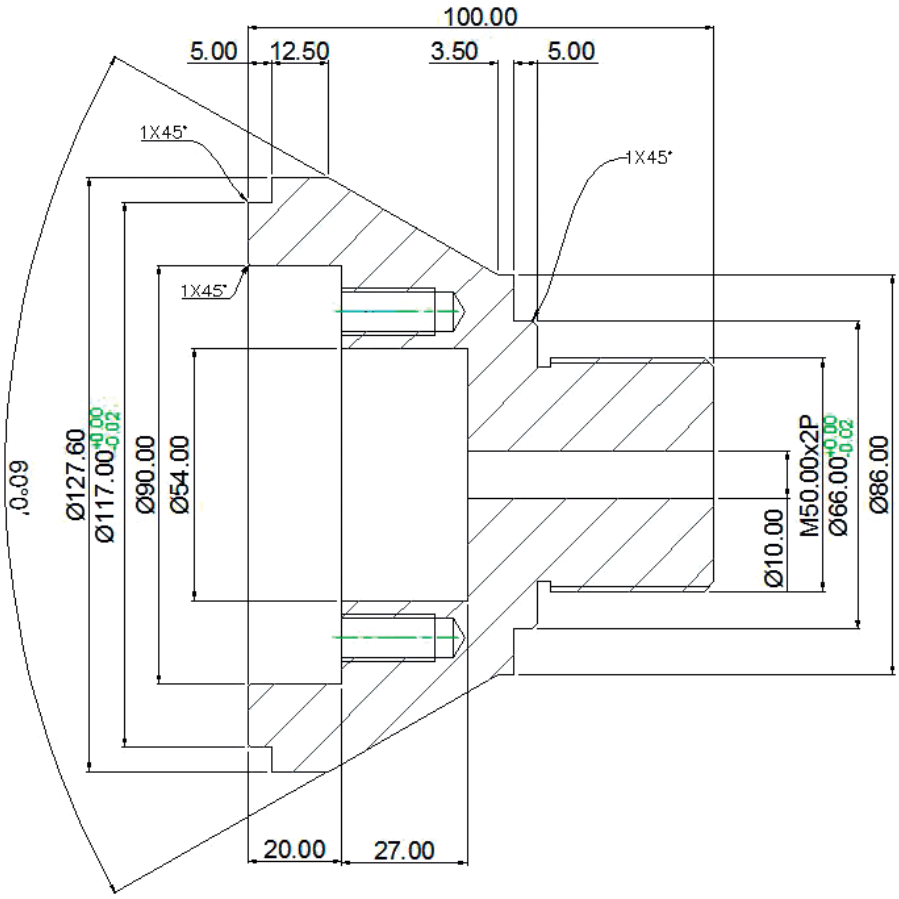

Figure 13.10 Mandrel extension A

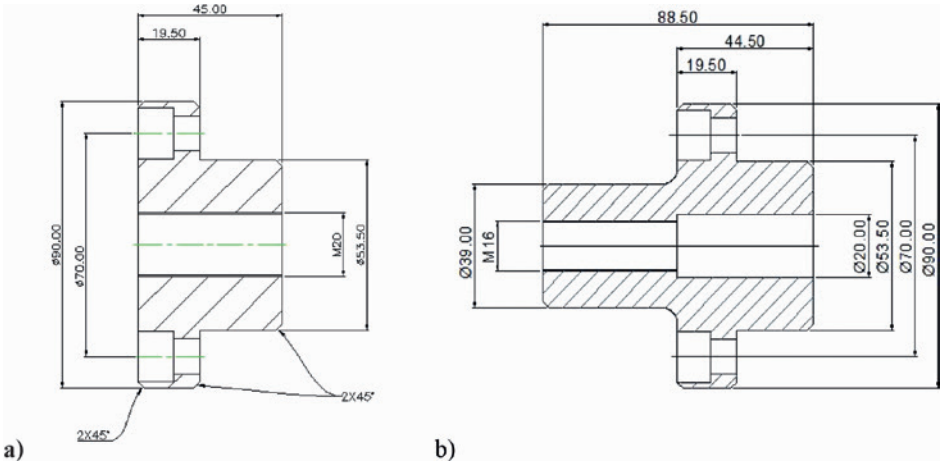

Figure 13.11 a) Mandrel extension insert B1 for pins of Ø50–110 mm pipes, b) insert B2 for pins of Ø25–40 mm pipes

The mandrel extension is a part of the die for the simulation of the melt flow. The rest of the parts are standard engineering and any engineer familiar with die design can design these parts to suit the equipment in order to complete the design. The striping rings have been explained in the previous chapters; therefore, they are not detailed here. The complete design of the die for ⌀110 mm and ⌀25 mm pipes is shown in the following section.

13.4.6 Complete Die

Having designed and detailed the major parts of the die above, the design of the die is completed with other parts as shown in Figure 13.12.

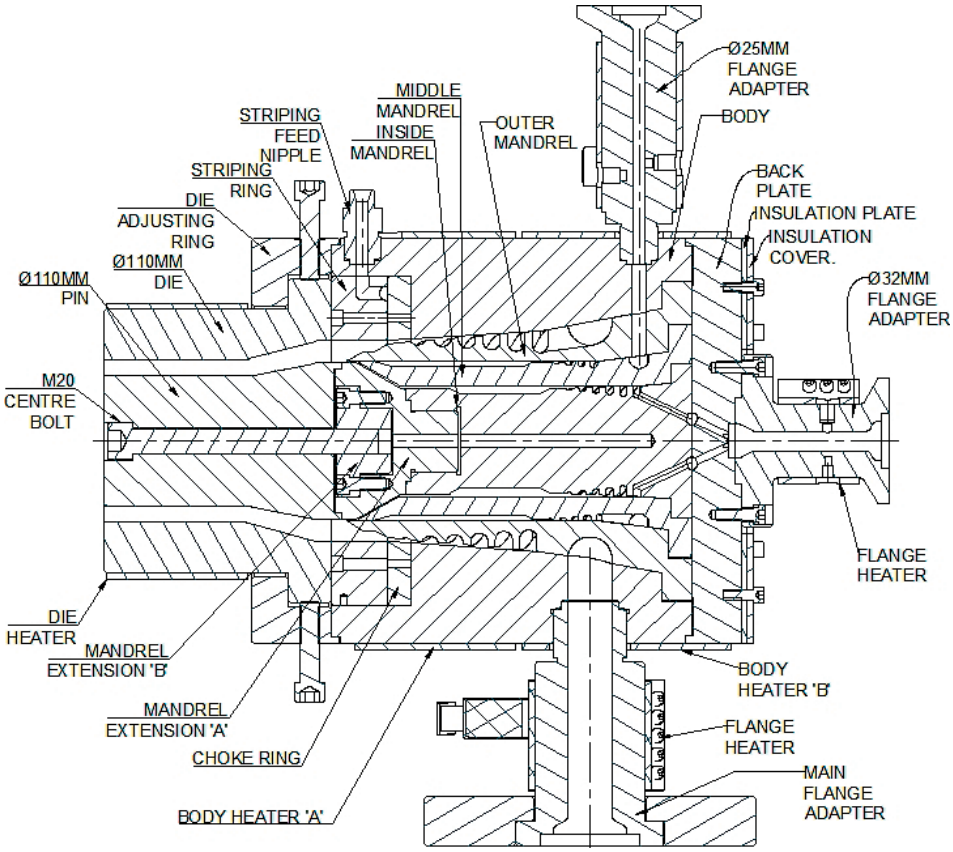

Figure 13.12 Complete ⌀110 mm die design

Figure 13.12 shows the complete design of the die with all the parts described in Figure 13.8, to which the die extension in Figure 13.10 and Figure 13.11 was added

to complete the link between the inside mandrel and the pin. Other parts like the flange adapters for all the extruders, the striping ring, the choke ring, the back plates, etc. were added to the design. Also, mica band heaters for the body, die, and flange adapters were added to the design as shown in Figure 13.12. The change from the ∅110 mm die to the ∅25 mm die is shown in Figure 13.13, where the die, pin, central bolt, and mandrel extension B have been changed. Changes to the dies for other sizes would be made similarly by changing some of the parts in the die.

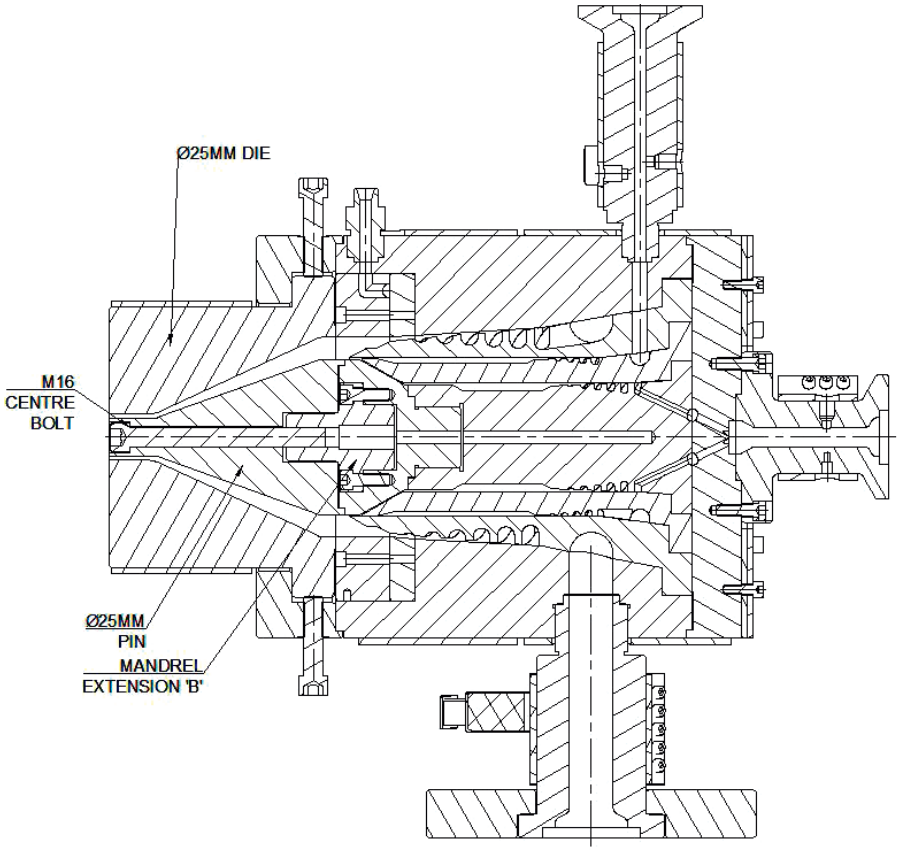

Figure 13.13 Complete ∅25 mm die design

13.5 Die Simulation

After completing the design of the die the next stage is to simulate the melt flow through the die. In the case of multilayer coextrusion dies, the main layer is first simulated and then the secondary layers are simulated. It is not expected that the

design will be perfect before the simulation. Normally, the design is changed to suit the simulation results. In this case, the die has already been simulated and all the necessary changes have already been made. The process of the simulation is meant to demonstrate the procedure. In all cases of die simulation, there are three parts to be simulated: the feed section, the distribution, and the tooling section, which is a section from the end of the distributor to the die exit. The same exercise is repeated for all three layers as follows:

13.5.1 Geometry for Simulation of Main Layer

The first step for the simulation is to define the geometry of all three parts of the main layer. Figure 13.12 gives the drawing of the whole die, from which a part of the die drawing concerning the outside layer is taken as shown in Figure 13.14.

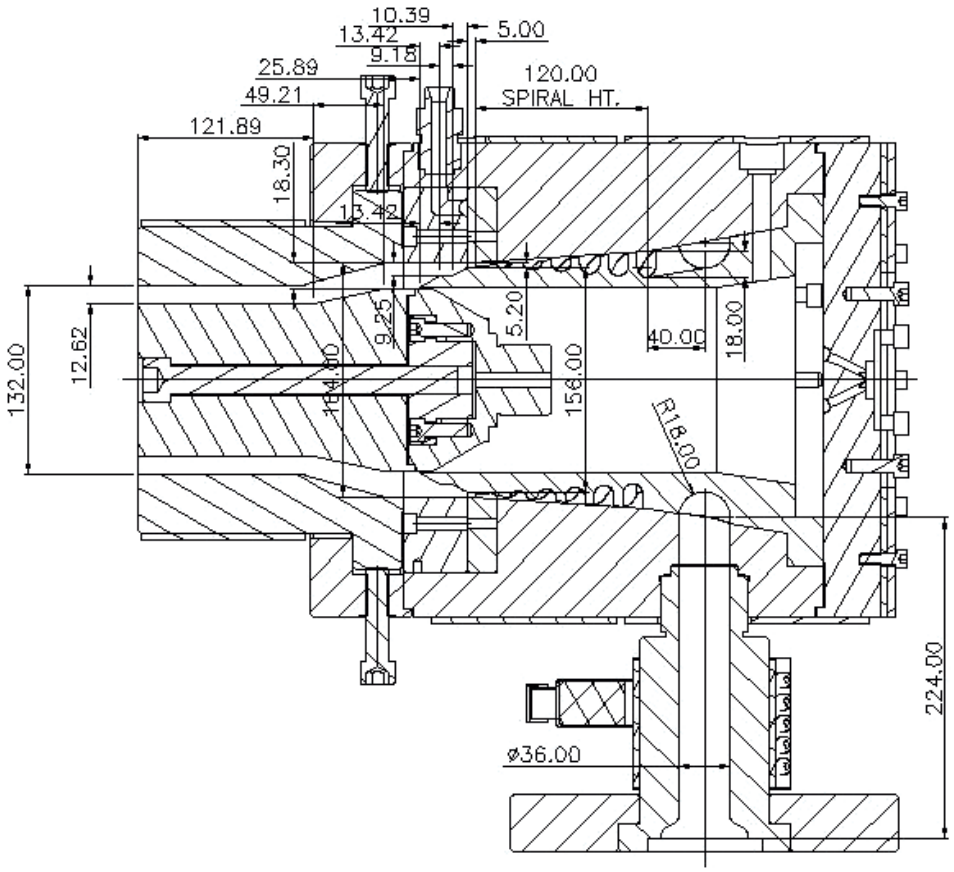

Figure 13.14 Dimensions for simulation of Ø110 mm die

The dimensions required for the simulation of the melt flow through all three sections are listed separately below:

13.5.1.1 Dimensions of Feed Section

The feed of melt from the extruder to the die is through the flange adapter, which delivers the melt into a circular groove around the circumference of the outer mandrel. The circular groove has seven channels cut into it, which connect the groove to 7 spirals. Therefore, the dimensions that are relevant to the flow are the diameter of the hole, the length of the flange adapter, and the distance between the groove and the spirals. The width of these channels for the simulation is kept the same as the width of the spirals at the start. In a later section the width of the channels and the width of the groove are simulated using a different part of the software. The diameter of the hole in the flange adapter is 36.00 mm and the length is 224.00 mm. The length of each channel is 40.00 mm and the width is 14 mm to coincide with the width of the spirals at the start. The summary of these dimensions used for the simulation is shown in Table 13.4.

Table 13.4 Dimensions of Feed Section

#	No of sections	Length L [mm]	L/D	Diameter ∅ [mm]	Cross section area [mm^2]
1.	1	224.00	6.22	36.00	1017.88
2.	7	40.00	2.86	14.00	153.94

The last column of Table 13.4 is the cross section area. The cross section area of section number 1 is 1017.88 mm^2 and the cross section area in section 2 is 153.94 mm^2 for each of the seven ports. Normally, the cross section area of section 1 should be greater than the combined area of the ports it feeds. In this case, the cross section area of section 1 is about 6.6 times the cross section area of each port. As the shear rate for the section 1 of the feed section is 29.95 s^{-1}, the diameter of section 1 can be increased slightly, to increase the ratio of the cross section area in section 1 to the cross section of the 7 feed ports, if required. In this case, the dimensions of both these sections are left as drawn.

13.5.1.2 Dimensions of Body, Mandrel, and Spirals

The dimensions of the body, mandrel, and spirals are listed in Table 13.5.

Table 13.5 Dimensions of Body, Mandrel, and Spirals

1.	Reference diameter (diameter in the middle of the start of the spirals)	179.25 mm
2.	Spiral height (from middle of start of spiral to end of spiral)	120.00 mm
3.	Diameter of mandrel at the end of spirals	156.00 mm

4.	Gap between the body and mandrel at the start of the spirals	0.025 mm
5.	Gap between the body and mandrel at the end of the spirals	5.20 mm
6.	No. of spirals	7
7.	No. of overlaps	7
8	Radius at the bottom of the spirals at the start	7.00 mm
9.	Depth of spirals at the start	18.00 mm
10.	Depth of spirals at the end	0.05 mm

The dimensions in Table 13.5 are for the second part of the die known as distributor. The dimensions given are from the feed section to the end of the spirals. The next section gives the dimensions of the section past the spirals to the die exit.

13.5.1.3 Dimensions of the Die Part Past the Spirals

The dimensions listed in these sections are from the end of the spirals to the die exit. As this is the main layer, the dimensions of the tooling part (i. e., die and pin) are taken as if it were one layer, because the other two layers are very thin to be split. All gaps are taken at the mean diameters—namely, the mean of the outside and the inside diameter. These dimensions are shown in Table 13.6.

Table 13.6 Dimensions of the Die Part Past the Spirals

#	Mean diameter at end of section [mm]	Total height from start [mm]	Height of section [mm]	Gap at the beginning [mm]	Gap at the end [mm]
1.	159.50	5.00	5.00	5.20	5.20
2.	154.75	15.39	10.39	5.20	5.20
3.	154.75	24.57	9.18	9.25	18.30
4.	145.70	37.99	13.42	18.30	18.30
5.	145.70	63.88	25.89	18.30	18.30
6.	119.38	113.09	49.21	18.30	12.62
7.	119.38	243.98	121.89	12.62	12.62

The dimensions for all three sections are taken from Figure 13.14 and have been put in a simple form for the simulation.

13.5.1.4 Feed Balancing

The actual dimensions for the 7 ports connecting the ring are obtained from the software after defining the processing conditions, given in Section 13.5.2. These dimensions are shown here in this section to keep all the geometry dimensions in one section. The software assumes that the section connected to the feed is a round hole of a given diameter and the feed to the spirals is also round holes connecting the ring to the spirals. Practically, it is difficult to form a round ring section to con-

nect to the feed from the flange adapter and also to cut holes from the feed groove to the spirals. There are also problems associated with the cleaning of round holes in these sections. Therefore, the sections are cut as slots in the tool and the dimensions of the slots are converted from circular to rectangular dimensions. For instance, the feed groove, which receives the material from the flange adapter, is shown as a semicircle of 18 mm radius, which is equivalent to ∅25.46 mm. The software predictions, for the processing conditions given in 13.5.2, give the diameters shown in Table 13.7 for the channels connecting the groove ring to the spirals. The port sizes given in Table 13.7 start from the two ports near the feed from the flange adapter to the ring and the last one is the port opposite the feed, as shown in Figure 13.15.

Table 13.7 Balanced Dimensions of Feed Ports as Shown in Figure 13.15

Port #	Port diameter [mm]
1	9.10
2	10.74
3	13.32
4	17.96

Figure 13.15 shows the round holes feeding the spirals, as shown in Table 13.7. The cross-sectional areas of these round sections are converted into rectangular sections as shown in Figure 13.16 and Table 13.8.

The depth of the channels is 18 mm and the widths of the channels are shown in Table 13.8; Figure 13.16 shows a section through the feed groove.

Table 13.8 Feed Holes in Figure 13.15 Converted to Slots (as Shown in Figure 13.16)

Port #	Port width [mm]
1	3.61
2	5.03
3	7.74
4	14.00

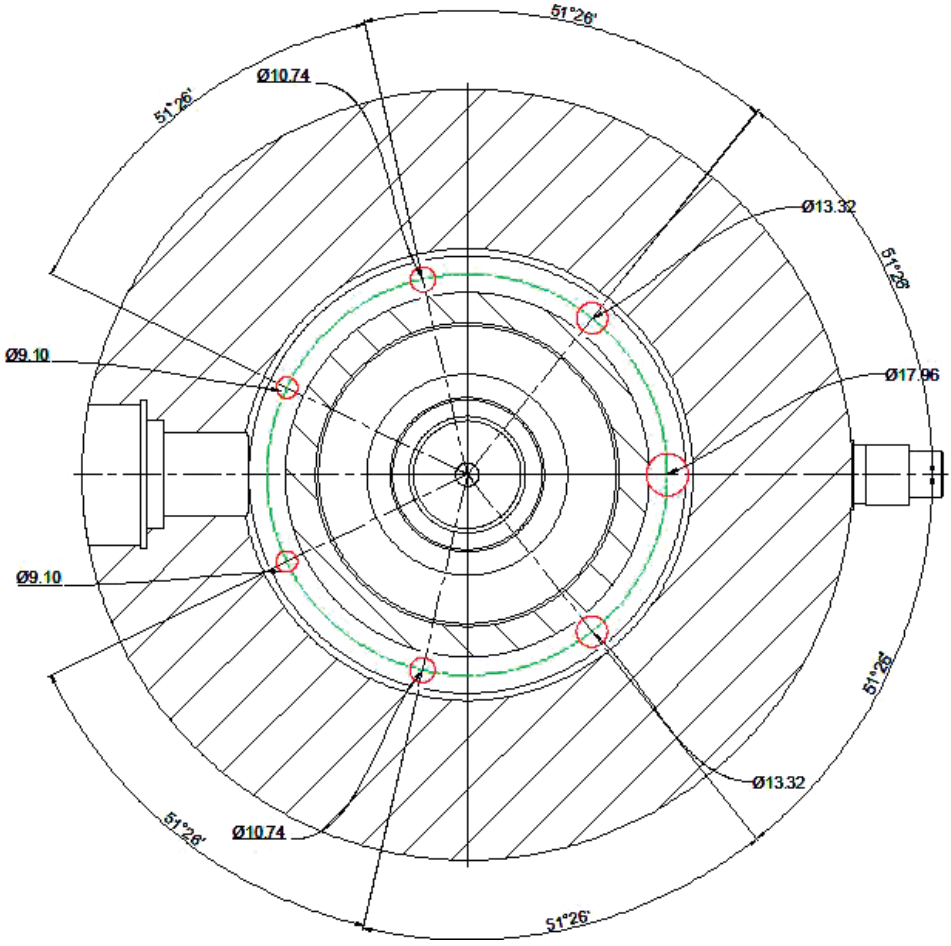

Figure 13.15 Feed balancing as shown in software

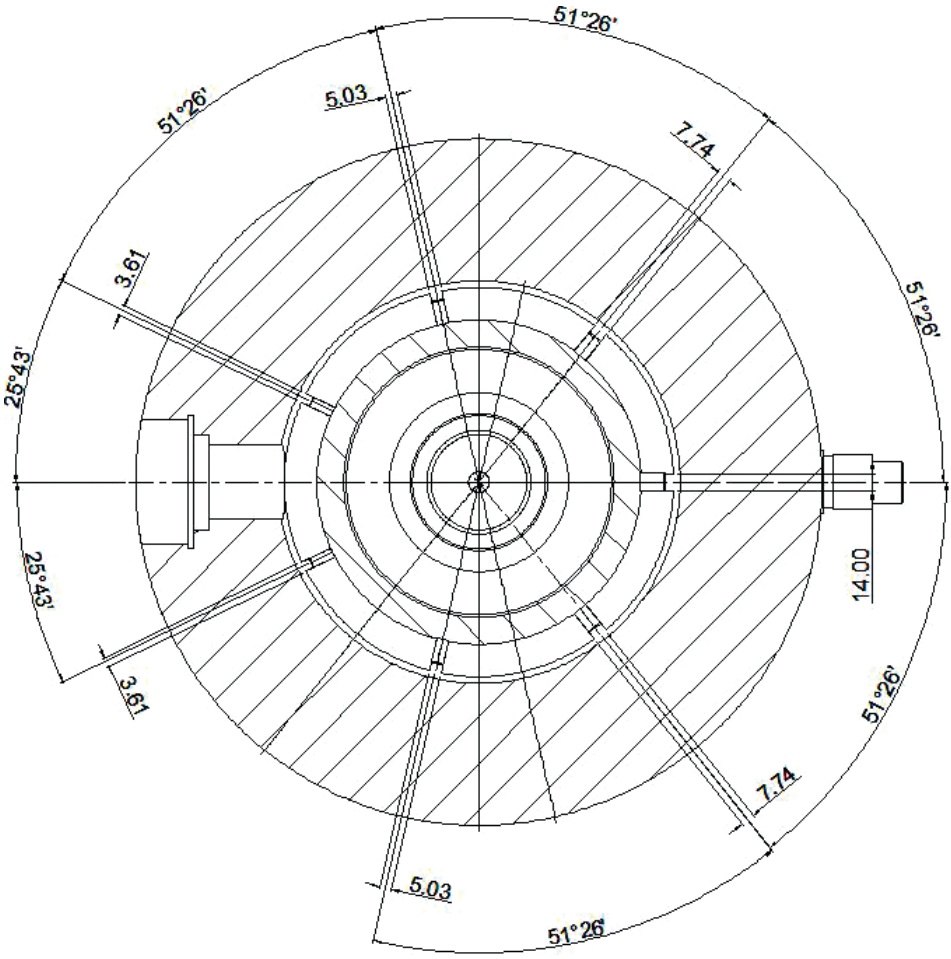

Figure 13.16 Feed ports from ring feed to spirals

In the case of small spiral mandrels, sometimes the difference in the cross section of a round hole and a rectangular feed is so small that the difference is ignored and the ports are made of the same size as predicted by the software.

13.5.2 Processing Conditions

In the simulation of the melt flow through the die, the processing conditions consist of the following:

- Material definition: the rheology data and the thermodynamic properties of the material are pre-defined and are linked to the processing conditions in the software; in this case it is HDPE general grade P100

- Flow rate or output: taken from Table 13.3 for ⌀110 mm pipes, 300 kg/h
- Die body temperature: 220 °C
- Melt temperature: 220 °C

13.5.3 Melt Variables Taken from Software

The above processing conditions are linked with the die geometry defined above in the software to calculate the flow variables. The software gives a detailed list of variables, but only the important ones are listed in Table 13.9.

Table 13.9 Melt Flow Variables Taken from the Software

	Pressure drop [MPa]	Shear rate [s^{-1}]	Shear stress [kPa]
1. Feed section a. Flange adapter to feed ring	2.34	29.95	94.08
b. Sections connecting feed ring to spirals	1.62	74.31	141.36
2. Spiral section	12.15	120.07 (max.) 30 (min.)	179.74 (max.) 15.69 (min.)
3. Section above the spirals (i. e., from end of spirals to die exit)	2.43	63.17 (max.) 5.13 (min.)	136.20 (max.) 40.03 (min.)

- Total pressure drop: 18.52 MPa
- Average flow rate at end of the spiral section: 1.55 $cm^3/s \pm 4.75\,\%$
- Average flow rate at the die exit: 1.55 $cm^3/s \pm 0.02\,\%$
- Velocity at point where all materials join the main stream: 1.75 mm/s

The values of shear rate and shear stress in the spiral section and the section above the spirals are varying as the melt flows in the main direction. Therefore, the maximum and minimum values are listed in Table 13.9. The desired shear rate values are 10 s^{-1} minimum and it is noted that the shear rate is below this value in a very small part of the section above the spirals, but since the shear stress is above 30 kPa in this area, this dip in the shear rate at this point is ignored, because by definition it is the shear stress what causes the rubbing action to clean the die. The shear stress in the middle of the spiral section is noted to be higher than the desired shear stress of 140 kPa, but, the average being below 140 kPa, this is also accepted. Normally, the shear stress in the land part of the tooling is watched carefully, because it results in shark skin in the final product.

13.5.4 Second Layer

Figure 13.6 shows the middle or second layer mandrel nested inside the first layer mandrel. Figure 13.7 gives all the necessary dimensions of the middle layer mandrel for manufacturing. The geometry of the inside layer mandrel for the simulation is shown in Figure 13.17.

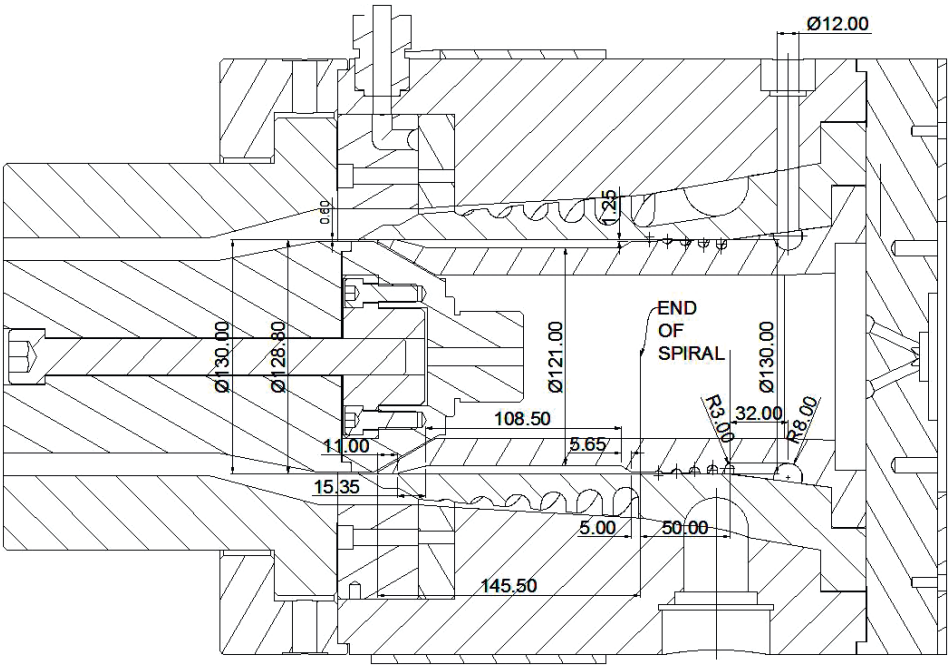

Figure 13.17 Inside layer mandrel nested inside the middle mandrel

13.5.4.1 Geometry for Simulation

From Figure 13.17, the geometry of the three sections (i.e., feed, distribution, and section after the spirals) for the simulation is listed below:

13.5.4.1.1 Feed Section

For the simulation purposes, the feed section has two parts: the feed from the extruder to the ring groove around the mandrel and the channels from the groove to the spirals. These two sections are listed in Table 13.10.

Table 13.10 Dimensions of Feed Section of Inside Layer

#	No. of sections	Length L [mm]	L/D	Diameter ⌀ [mm]	Cross section area [mm^2]
1.	1	225	18.75	12.00	113.05
2.	5	32.00	5.33	6.00	28.27

The cross section area of the feed from the extruder, in the last column of Table 13.10, should be at least the same as the combined area of the channels connecting to the spirals, so that there is enough flow of melt from the feed to the spirals. Therefore, the diameter of the first section is increased from ⌀12.00 mm to ⌀14.00 mm. This adjustment gives the new relationship in the dimensions as shown in Table 13.11.

Table 13.11 Modified Dimensions of Feed Section

#	No. of sections	Length L [mm]	L/D	Diameter ⌀ [mm]	Cross section area [mm^2]
1.	1	225	16.07	14.00	153.94
2.	5	32.00	5.33	6.00	28.27

13.5.4.1.2 Distribution Section

The dimensions of the inside of the first layer mandrel and the outside of the second layer mandrel and the dimensions of the spirals make up the dimensions of the distribution section for the simulation, and they are listed in Table 13.12.

Table 13.12 Dimensions of Distribution Section

1.	Reference diameter (diameter of mandrel in the middle of the start of spirals)	129.95 mm
2.	Spiral height (distance from the middle of start of spirals to end of spirals)	50.00 mm
3.	Diameter at the end of the body (inside of the first layer mandrel)	130.00 mm
4.	Diameter of the mandrel at the end of the spirals	127.50 mm
5.	Gap between the body and mandrel at the start of spirals	0.025 mm
6.	Gap between the body and mandrel at the end of spirals	1.25 mm
7.	Number of spirals	5
8.	Number of overlaps	5
9.	Number of feed ports	5
10.	Radius at the bottom of spirals at the start	3.00 mm
11.	Depth of spirals at the start	6.00 mm
12.	Depth of spirals at the end	0.05 mm

13.5.4.1.3 Section above the Spirals

In the previous layer (outer layer), this section was taken from the end of the spirals to the die exit; in the case of the middle layer and the inside layer it will be taken from the end of the spirals to the joining of the main melt stream, thereafter the melt from these layers will be carried along by the main layer. In the case of the inside layer there will be some friction from the metal surface of the inside geometry, but its effect is so small that it can be ignored for practical purposes. The dimensions of this section are listed in Table 13.13.

Table 13.13 Dimensions of Section above the Spirals

	Mean diameter at the end of section [mm]	Total height from the start [mm]	Height of section [mm]	Gap at the beginning [mm]	Gap at the end [mm]
1.	128.750	5.00	5.00	1.25	1.25
2.	125.50	10.65	5.65	1.25	4.50
3.	125.00	119.15	108.50	4.50	4.50
4.	129.40	135.50	15.35	4.50	0.60
5.	129.40	145.50	11.00	0.600	0.600

The diameters in the second column of Table 13.13 are the mean of the outside and the inside diameters as requested by the software.

The above dimensions of all three sections make up the geometry requirements for the simulation of the melt flow through this layer of the die and they are used with the processing conditions to get the flow variables.

13.5.4.2 Processing Conditions

The processing conditions for the simulation are similar for all the layers and consist of the die geometry as defined above, material rheology data, thermodynamic properties, melt temperature, and die temperatures. These processing conditions for the second layer are listed as follows:

- Die geometry: as defined in 13.5.4.1
- Material grade: EVA of known rheological and thermodynamic properties
- Output: the maximum output calculated in Table 13.3 is 6.72 kg/h; 8 kg/h is set for the simulation
- Melt temperature: 220 °C
- Die temperature: 220 °C

With the input of the above information the software calculates the flow variables as follows:

13.5.4.3 Melt Variables Taken from Simulation

After the completion of all the input of data in the software, the software works out the results and gives several variables. The die designer would look at the variables and change the input data, if necessary, to get satisfactory results. Only the important variables are shown below and, if necessary, other parameters can be further investigated. In the case of unsatisfactory results, corrective action is taken by the designer to ensure that the die is suitable for the purpose. The variables from the whole die and the three sections mentioned above are listed below:

13.5.4.3.1 Feed Section

As mentioned above, there are two sections of the feed section, which have been defined, and the results of these sections are listed in Table 13.14.

Table 13.14 Flow Variables in the Feed Section

#		Pressure drop [MPa]	Shear rate [s^{-1}]	Shear stress [kPa]
1.	Flange adapter	1.66	11.87	25.59
2.	Connecting channels	1.03	31.24	48.15

The other variables given by the results are temperature variation and velocity. As the temperature variations in these areas are very small and the velocity is related to the output, which is pre-defined, these results are ignored and not listed here.

13.5.4.3.2 Distribution Section

Similar variables for the distribution section are listed in Table 13.15.

Table 13.15 Flow Variables in the Distribution Section

#		Pressure drop [MPa]	Shear rate [s^{-1}]	Shear stress [kPa]
1.	From the start of the spirals to the end of the spirals	1.66	11.87	25.59
2.	Connecting channels	1.03	31.24	48.15

13.5.4.3.3 Section above the Spirals

The values of shear rate and shear stress in this section are maximum in the last part of the section, where the channel is very narrow. See Table 13.16.

Table 13.16 Flow Variables in the Section above the Spirals

	Pressure drop [MPa]	Shear rate (max.) [s^{-1}]	Shear stress (max.) [kPa]
From the end of the spirals to the die exit	4.976	138.69	138.69

Another value of the important variables in this section is the melt velocity at the point where it joins the main stream, and this value is 1.99 mm/s. As the behavior of the melt can vary due to several factors, the gap at the end is kept minimum, because it can easily be increased and it is difficult to decrease. The value given above is for the gap shown in Figure 13.17.

The pressure drop in the whole middle layer from the start to the end is 16.54 MPa, the average flow variation at the end of the spirals is 0.059 cm^3/s ±1.42%, and the average flow variation to the point where it joins the main melt stream is 0.059 cm^3/s ±0.01%.

13.5.5 Third or Inside Layer

The third layer, as shown in Figure 13.12, is fitted inside the middle or second layer mandrel. This means that the inside of the second layer mandrel provides the outside of the third layer, as detailed in Figure 13.7, and the details of the distribution are given on the inside mandrel in Figure 13.9. The melt feed to this layer is directly from the back of the die, which is from the extruder situated in line with the die, as shown in Figure 13.12 and Figure 13.13. The front of the inside layer mandrel is fitted with the die extension, to which the pin is fitted to form the complete inside of the pipe. The previous two layers—namely, the outside and the middle (tie) layer—are common for all variations.

In the design brief it was said that this die is to be made with an inside layer of PVDF, PA12, or EVOH. Therefore, to make the die adaptable for any of these materials, the distribution part is made to run satisfactorily with all these materials. The die extension at the end of the mandrel is a detachable part and can be modified to suit. This part is relatively inexpensive; therefore, it can be easily modified or replaced. As in the previous sections, this whole section is divided into three parts (i.e., feed, distribution, and section above the spirals). The geometry of this inside section of the die is defined as follows:

13.5.5.1 Inside Layer Geometry

13.5.5.1.1 Feed Section

In this section, the melt from the extruder is delivered to the spirals. In this case there is a flange adapter part, which is connected to the die on one end and to the extruder on the other end. The hole in the flange adapter is ∅22 mm, which delivers the melt into a small cavity in the back of the die in the back plate. From here the feed is split into 6 equally spaced holes, which connect the melt to 6 spiral ports. In all, there are three sections, as shown in Figure 13.18, and the dimensions are listed in Table 13.17.

Table 13.17 Dimensions of Feed Section

#	Splits	Length L [mm]	L/D ratio	Diameter ∅ [mm]	Cross section area S [mm^2]
1.	1	117.00	5.32	22.00	380.13
2.	6	70.00	8.75	8.00	50.27
3.	6	20.00	3.33	6.00	28.27

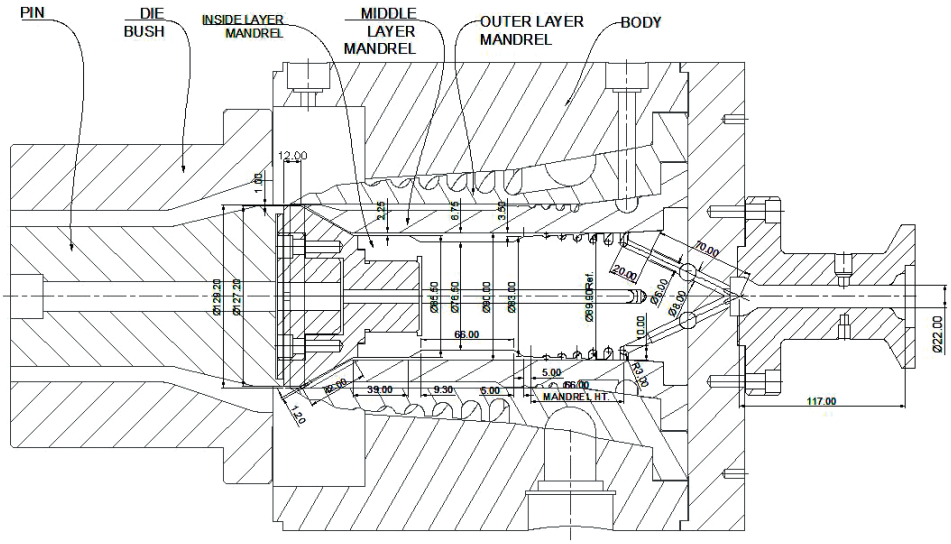

Figure 13.18 Dimensions of inside layer

13.5.5.1.2 Body, Mandrel, and Spirals

The dimensions for this section are taken from the drawing in Figure 13.18 and they are listed in Table 13.18.

Table 13.18 Dimensions of Body, Mandrel, and Spirals

1.	Reference diameter (diameter in the middle of the start of spirals)	89.90 mm
2.	Spiral height (distance from the middle of the start of spirals to the end of spirals)	66.00 mm
3.	Diameter at the end of the body (inside the second layer mandrel)	90.00 mm
4.	Diameter of mandrel at the end of spirals	83.00 mm
5.	Gap between the body and mandrel at the start of spirals	0.05 mm
6.	Gap between the body and mandrel at the end of spirals	3.50 mm
7.	Number of spirals	6
8.	Number of ports	6
9.	Number of overlaps	6
10.	Radius at the bottom of spirals at the start	3.00 mm
11.	Depth of spirals at the start	10.00 mm
12.	Depth of spirals at the end	0.05 mm

13.5.5.1.3 Section above the Spirals

The dimensions from the end of the spirals to where the melt joins the main melt stream are listed in Table 13.19.

Table 13.19 Dimensions of Section above the Spirals

#	Mean diameter at the end of spirals [mm]	Total height from the start [mm]	Height of section [mm]	Gap at the beginning [mm]	Gap at the end [mm]
1.	86.50	5.00	5.00	3.50	3.50
2.	83.25	10.00	5.00	3.50	6.75
3.	83.25	76.00	66.00	6.75	6.75
4.	88.00	85.30	9.30	6.75	2.25
5.	88.00	124.30	39.00	2.25	2.25
6.	128.30	166.30	42.00	2.25	1.20
7.	128.30	178.30	12.00	1.20	1.20

The geometry of all 3 sections of the inside layer is defined and this is linked with the processing conditions to simulate the flow variables.

13.5.5.2 Processing Conditions

As stated in the design brief, the inside layer is designed to have the capability to work with any of three materials: PVDF, PA12, or EVOH. In this case, the rheological and thermodynamic properties of EVOH are used for the simulation. The maximum calculated output of 17.34 kg/h in Table 13.3 is for a 32/26 pipe; therefore, 20.00 kg/h is used here for the simulation. The other processing conditions are as follows:

- Body temperature: 220 °C
- Material: EVOH
- Melt flow rate: 20.00 kg/h
- Melt temperature: 220 °C

13.5.5.3 Simulation Results

Once the geometry is defined and the processing conditions are established, the software is used to solve the flow through the die, which results in several melt variables. Only the important ones are listed in Table 13.20 from the complete list of variables.

Table 13.20 Important Melt Variables Obtained from the Software for the Inside Layer

	Pressure drop [MPa]	Shear rate [s^{-1}]	Shear stress [kPa]
1. Feed section			
a. Flange adapter	0.624	7.25	29.32
b. 6 feed holes ⌀8.00 mm	2.16	25.64	61.57
c. 6 feed holes to spirals	1.34	61.44	100.24
2. Spiral section	5.34	40.72	81.55
3. Section above the spirals to the main melt stream	10.46	97.82	133.46

- Total pressure drop: 19.92 MPa
- Average flow rate at end of spirals: 0.1096 cm^3/s ±2.93 %
- Average flow rate at melt exit: 0.1096 cm^3/s ±0.01 %
- Total temperature variation: 2 °C

The values of the shear rate and shear stress in Table 13.20 are maximum. The total pressure drop is 19.92 MPa, which is just under 20 MPa, the desired limit. The shear stress is 133.49 kPa at the end section and it is below the desired limit of 140 kPa.

13.6 Flow Balancing of Three Layers

So far, all three layers have been designed and the flow variables have been balanced individually. The outputs from the three layers have been calculated based on the density of the three materials. In Table 13.3, the output of the second and the third layer has been calculated in relation to the output of the main layer.

Firstly, the line speed for a given output of the main layer of each size of the pipe is calculated and, for the same line speed, the output of the second and third layers has been calculated. Based on these output values, the pressure drop, shear rate, and shear stress have been worked out using the software as if these layers were independent from one another. The problems of interface instabilities between the layers occur when they are brought together in one flow domain, due to the differences in viscosities and other properties. In complex multilayer dies, the controlling of the flow from each layer to match with the flow of the other layers is not easy.

This problem is further complicated when different types of materials are used in the same die to produce different sizes of the products. As in this case, for one type of outside layer and second layer, there are three different types of materials of differing rheological and thermodynamic properties and there are six different sizes of pipes. The designer is often confronted with the complex problem of designing a die for producing precision products with so many variations. For this reason, the main layer is designed for the whole product and some means of varying the flow of other materials are made when possible. The second layer, in this case, is a tie layer of adhesive to join the other two layers and can be controlled from the output. In adverse cases, a small adjustment of the end gap can be made if necessary.

The control of the melt flow from the third (inside) layer is more difficult. The output of the third layer varies from 7 kg/h for a ∅110 mm pipe to 17.22 kg/h for a ∅25 mm pipe, as shown in Table 13.3. For this reason, the mandrel extension “A” in Figure 13.12 and Figure 13.13 is made replaceable. The adjustment to the melt flow from the third layer mandrel can be made by increasing or decreasing the gap between the conical part of the mandrel extension “A” and the middle layer mandrel. The mandrel extension inserts B1 and B2 are made to accommodate two different sizes of the socket head mounting bolts, as shown in Figure 13.11.

14 Materials for Extrusion Dies

In the process of die design, so far, only design aspects have been covered and nothing has been mentioned about the material for the extrusion dies. The selection of the right steel for the manufacture of extrusion dies is very important. As the process of designing and manufacturing the die is expensive, the choice of the correct steel is also necessary. The die designer has all the information regarding the plastics materials being processed through the die; therefore, the designer should also investigate the correct material for the die.

Different plastic polymers have different properties in terms of processing temperatures, corrosion, excessive wear in the case of materials with different fillers like calcium carbonate, compounds with bromides, fluorides, or in some cases glass fibers, etc. The use of the polymer for final applications also has a great influence on the choice of the steel—for instance, dies designed for the processing of medical applications—and it should not contaminate the material being processed due to corrosion of the die parts. In the case of dies for materials like PVC or PVDF, corrosion resistant steels are used to minimize the effect of chlorine or fluorine released by the polymers at higher temperatures.

High processing temperatures, as in the case of polycarbonate, PEEK, etc., also influence the choice of the steel. The machining ability of the steel also affects the choice of the materials, as in the case of materials like Hastelloy, which work harden during the machining, and special care is taken during the machining or an alternative material is selected.

There are also some historical reasons for the choice of steel for the dies. It has been seen in many cases that the engineers working on injection molding, blow mold, machinery and equipment manufacturing, etc. tend to use the steels they are familiar with in other processes. Sometimes, the manufacturers and distributors of various types of steels tend to influence the die designer's choice, to sell their own brand. Therefore, the more experienced the die designer, the better equipped he will be to select the right material for the right job.

With all these influences in mind and the personal experience of the author, some of the commonly used steels for extrusion dies are listed below with their applica-

tions and limitations [1]. Normally, simple dies can be made from a number of materials, as follows:

14.1 Nitrided Steels

The nitriding process is a heat treatment of steel that diffuses nitrogen into the surface of the metal to create a case-hardened surface. These processes are used on low-carbon, low-alloy steels. They are also used on medium and high-carbon steels with alloying elements such as titanium, aluminum, molybdenum, and vanadium.

The nitriding process imparts high surface hardness to steel components. There are other processes that offer the same results, but nitriding offers certain crucial advantages, such as:

- Low processing temperature—around 495 °C to 535 °C.
- In a nitride hardening process, the components are slowly heated and cooled at the end of the cycle. Hence, the sudden shock to the steel parts is avoided, such as quenching at the end of the cycle.
- This process is carried out under a protective atmosphere, resulting in an oxide-free clean finish of the product.
- It gives a wear resistant surface while maintaining the form of the component and the dimensional accuracy of complex shapes. Typical applications include car crankshafts, gears, camshafts, cam followers, valve parts, extrusion screws, extrusion dies, forming dies, die casting tools, injection molds, etc.
- Selected parts of the complex components, if required, can be hardened by masking the unnecessary surfaces with special paint.

The main disadvantages of the nitriding process are as follows:

- Oily and contaminated surfaces with cutting fluids will deliver poor results. In some cases, flaking of the surfaces is also noted.
- Steels with high chromium contents may require activation.
- The high concentration of ammonia in the nitriding process can be harmful if inhaled in large quantities.
- The hardness on the surface of the steel parts is only 30–80 microns and once it wears out in the process, the surface underneath is usually soft. Surfaces to be treated with this method should be fine turned, ground, and in some cases polished before the treatment. A minimal amount of material should be removed after nitriding to preserve the surface hardness.

Materials for Nitriding

- Most of the steels with nitride-forming alloys, such as aluminum, chromium, molybdenum, and titanium, are used for nitriding.
- Many of the steels in SAE and UK aircraft quality steel grades are used for nitride hardening.

The most commonly used steels for plastic processing molds and dies are listed in Table 14.1–Table 14.4 with their approximate chemical composition.

Table 14.1 Chemical Composition of 1.2767 (EN 30B) Steel

	C	Cr	Mo	Ni
1.2767 (EN 30B)	0.45%	1.4%	0.3%	4.0%

Table 14.2 Chemical Composition of 1.8509 (EN 41B) Steel

	C	Si	Mn	Cr	Mo	Al
1.8509 (EN 41B)	0.40%	0.25%	0.50%	1.60%	0.20%	1.20%

Table 14.3 Chemical Composition of 1.2344 (H13) Steel

	C	Si	Cr	Mo	V
1.2344 (H13)	0.40%	1.0%	5.3%	1.4%	1.0%

Table 14.4 Chemical Composition of 1.2311 (P20) Steel

	C	Mn	Cr	Mo
1.2311 (P20)	0.40%	1.5%	1.90%	0.2%

14.2 Fully Hardened Steels

The hardening of steel is associated with tempered steel. Medium or high-carbon steels are heated to a high temperature above the alloy's critical temperature and then quenched, followed by tempering. The quenching results in the formation of metastable martensite; the follow-on tempering operation will reduce the amount of martensite to the desired level of hardness.

The process of hardening and tempering is a four step process. Firstly, the carbon steel is gradually heated to a temperature above the alloy's critical temperature

and then quenched in a suitable media, usually water or oil. Steel at this stage is at the alloy's maximum hardness and is usually brittle. At this stage, tempering is performed to achieve the desired hardness and toughness. In tempering, the steel is heated to a temperature significantly lower than the alloy's critical temperature and again quenched to the desired level. This process is carried out by experienced metallurgists to avoid the fracturing and distortion of the steel, which is common with high-carbon steels.

Some of the fully hardened steels used for the polymer processing dies are as follows:

14.2.1 1.2344 (H13) Steel

This is a very commonly used steel for polymer extrusion dies, due to its high hot tensile strength, wear resistance, and toughness. The achievable hardness for 1.2344 (H13) is 52-56 HRC.

Table 14.5 Chemical Composition of 1.2344 (H13) Steel

	C	Si	Cr	Mo	V
1.2344 (H13)	0.40%	1.0%	5.3%	1.4%	1.0%

14.2.2 1.2767 (EN30B) Steel

This grade of steel has high hardenability, the highest toughness, and good polishability. The achievable hardness is 56 HRC.

Table 14.6 Chemical Composition of 1.2767 (EN30B) Steel

	C	Cr	Mo	Ni
1.2767 (EN30B)	0.45%	1.4%	0.3%	4.0%

14.2.3 1.2316 Steel

This steel has a high corrosion resistance due to its high chrome content. It offers good machinability and polishability. It is more expensive than the other steels, but it is very good for PVC dies due to its corrosion resistance. The achievable hardness is 49 HRC.

Table 14.7 Chemical Composition of 1.2316 Steel

	C	Cr	Mo
1.2316	0.36%	16%	1.2%

There are several other grades of steels available in this category, and the final choice is balanced against price and availability in the market. The limitation with fully hardened steels is the size. Fully hardened steels are good for a small to medium size of the dies. The distortion in fully hardened steels with hollow sections is a problem, unless it is handled by expert heat-treatment personnel. The grinding of hardened parts can also impose some limitations, as this operation is essential after the heat-treatment. Parts up to ∅400 mm can be handled easily in most workshops.

14.3 Quenched and Tempered Steels

These steels are used as supplied and are suitable for all size dies where further heat-treatment is not required. They do not have the same hard wearing properties as fully hardened steels due to quenching and tempering. As these steels are annealed after hardening, they have low hardness and strength, but high toughness and elasticity. The polishability is also not as good as with fully hardened steels. The surface finish and hardness can be further improved with secondary treatments of nitriding or chrome plating. The most commonly used steels in this category are as follows:

14.3.1 1.2311 (P20) Steel

This quenched and tempered steel is widely used for plastics extrusion dies in as-supplied condition. In the annealed state it has a hardness of 30-32 HRC. Further surface hardness can be achieved with nitriding. In the as-supplied state, it has excellent machinability and reasonable polishability.

Table 14.8 Chemical Composition of 1.2311 (P20) Steel

	C	Mn	Cr	Mo
1.2311 (P20)	0.40%	1.50%	1.9%	0.2%

14.3.2 1.2312 (P20+S) Steel

This quenched and tempered steel has improved machinability and polishability compared to 1.2311, due to its sulphur contents. Its as-supplied hardness is 30-35 HRC. It can be used in place of 1.2311, but tends to be more expensive than 1.2311.

Table 14.9 Chemical Composition of 1.2312 (P20+S) Steel

	C	Mn	Cr	Mo	S
1.2312 (P20+S)	0.40%	1.5%	1.9%	0.2%	0.05%

14.3.3 1.2738 (P20+Ni) Steel

This hardened and tempered steel offers improved hardenability due to its nickel content of 1%. It is recommended for dies above ⌀400 mm. 1.2738 is a vacuum degassed special steel and offers excellent machinability and polishability. In quenched and tempered condition it comes with a hardness of 30-35 HRC, and a hardened and tempered hardness of 51 HRC is achievable.

Table 14.10 Chemical Composition of 1.2738 (P20+Ni) Steel

	C	Cr	Mo	Ni	S
1.2738 (P20+Ni)	0.40%	1.9%	0.2%	1.0%	≤ 0.005%

14.4 Speciality Steels

Some polymers are more corrosive than others and attack the surface of the dies during the processing, and in some cases after the processing. Polymers like PVC, PVDF, ETFE, and plastics containing bromide as fire retardant require special steels for the manufacture of dies and tooling. Some of these steels are so expensive that the use of them is not economically viable. Therefore, only in some cases, especially the coating of the die surfaces, they are used. The most commonly used steels for special applications are listed as follows:

14.4.1 1.2316 Steel

Normally used for PVC processing dies due to its high chromium contents: it has a high corrosion resistance due to its 16 % chromium content. It has a good machinability and polishability. It normally comes in quenched and tempered condition. It can be hardened to 49 HRC. It is supplied in plate, flat bar, and round bar forms; therefore, it is suitable for plastics injection molds, profile, and pipe dies. The chemical composition of this steel is shown in Table 14.11.

Table 14.11 Chemical Composition of 1.2316 Steel

	C	Cr	Mo
1.2316	0.36 %	16 %	1.2 %

14.4.2 1.2083 Steel

It is used for the processing of corrosively acting plastics. The chromium content of this grade of steel is less than the one of 1.2316. Still, it offers a better corrosion resistance than normal tool steels. It has good machining and polishability qualities. It is supplied in annealed condition and it can be fully hardened to 56 HRC. It is available in flat plate, flat bars, and round bars; therefore, it can be used for injection molds and extrusion dies. The chemical composition of this steel is shown in Table 14.12.

Table 14.12 Chemical Composition of 1.2083 Steel

	C	Cr
1.2083	0.42 %	13 %

14.4.3 Stainless Steel

Normal stainless steel is too soft for extrusion tooling. There are special grades of stainless steel for tooling applications. Some of the commonly used grades of stainless steel are as follows:

14.4.3.1 1.4462 Steel

More commonly known as Duplex F51, it is a grade of stainless steel with a 50 : 50 austenite, ferrite microstructure. The material has a combination of good mechanical strength and ductility with a good corrosion resistance in a variety of environ-

ments. It comes in annealed condition, giving good yield strength. Because of its high chromium contents of 21–23 %, combined with other elements it gives a good pitting resistance (>34 PREN—Pitting Resistance Equivalent Number). It has been used satisfactorily for tools used in the processing of PVDF and PVC. As it has a lower hardness (28 HRC) than many other tool steels, it is best used for the internal parts of the dies, which come in direct contact with corrosive materials. According to the suppliers, the chemical composition of 1.4462 is as shown in Table 14.13.

Table 14.13 Chemical Composition of 1.4462 Steel

	C	Cr	Si	Mg	P	S	Ni	Mo	NO
1.4462	0.03 %	21–23 %	1 %	2 %	0.035 %	0.015 %	4.5–6.5 %	2.5–3.5 %	0.1–0.2 %

14.4.3.2 UDDOHOLM STAVAX® ESR

It is a premium grade stainless tool steel (also classed as 1.2083, as above, but it has a better chemical composition) with the following properties [2]:

- Good corrosion resistance
- Excellent polishability
- Good wear resistance
- Good machinability
- Good stability in hardening

Because of these properties, this steel is used ideally for tools used in medical applications. It can be hardened to 50-52 HRC, which makes it a good choice for long lasting small extrusion tools. The limitation is the availability of the size of the round bar, which has a maximum of ∅255 mm. Its chemical composition, according to the manufacturer, is as shown in Table 14.14.

Table 14.14 Chemical Composition of UDDOHOLM STAVAX® ESR

	C	Cr	Si	Mn	V
Stavax®	0.38 %	13.6 %	0.9 %	0.5 %	0.3 %

14.4.4 Other Metals

Some other steels are only used for special applications where high levels of fluoride and bromide are present. During the processing of materials like ETFE and polymers with bromide used as fire retardant, combined with a high processing temperature, they emit gases like fluorine or bromine. These gases, when they

react with moisture in the atmosphere, form acids like hydrofluoric acid and bromide, which causes severe pitting of the steel. The main applications for these steels are in cable and wire industries.

14.4.4.1 Hastelloy®

Hastelloy® is a brand name of Haynes International Inc. [3], which is one of the largest producers of high performance nickel-cobalt based alloys. The company makes 12 corrosion-resistant alloys marketed under the Hastelloy brand. The most commonly used grade in the wire industry for the processing of corrosive polymers is Hastelloy C-276. As the price of this high performance steel is very high, its use is limited to small dies or to certain parts of the dies, in the wire and cable industries, for the extrusion of polymers containing fluoride and bromide compounds. It has a good machinability and polishability, if the right cutting tool, feeds, and speeds are used, following the manufacturer's guidelines. The use of wrong cutting speeds can result into work hardening of the metal, which has to be annealed for further work on it. According to the manufacturer's specifications, the chemical composition of the Hastelloy® C-276 is as shown in Table 14.15.

Table 14.15 Chemical Composition of Hastelloy® C-276

	Co	Cr	Mo	Ni	W	Fe	Si	Mn	C	V
Hastelloy® C-276	2.5%	16%	16%	Balanced	4%	5%	0.08%	1%	0.01%	0.35%

14.4.4.2 Inconel®

The alloy 600 is a nickel-chromium-iron alloy, a standard engineering for applications that require resistance to corrosion and heat [4]. This alloy has excellent mechanical properties and presents a desirable combination of high strength and good workability. Because of the high cost of this metal, it is used in small dies for wire and cable, for the processing of polymers containing fluoride and bromide. The chemical composition of this metal, according to the manufacturer's literature, is as shown in Table 14.16.

Table 14.16 Chemical Composition of Inconel® Alloy 600

	Cr	Ni+Co	Fe	Si	Mn	C	Si	Cu
Inconel® alloy 600	14–17%	72%	6–10%	0.50%	1%	0.15%	0.50%	0.50%

14.4.4.3 Tungsten Carbide

Small components like pins and dies, especially used in wire and cable dies, are made from sintered metals powder of carbide and tungsten in equal quantities. Tungsten carbide tooling is more than two times stiffer than steel and lasts several times longer if there is abrasion of the tooling with other metals, like copper wire.

14.4.5 Corrosion Resistant Plating

The plating of the surfaces of the dies that come in contact with corrosive materials like PVC, PVDF, etc. is also used in some applications. Large dies for the processing of PVC and PVDF made from non-corrosive metals are expensive. Therefore, the surfaces of certain parts are electro-plated with chromium and nickel. Hard chrome plating is corrosion resistant, quite wear resistant, and it is highly polished and gives less adhesion of polymer melt to the surface than normal tool steel. Chrome plating is usually 0.015 mm to 0.30 mm thick. Sometimes, thicker coating is applied and the surface is ground to make up the difference in the size of the parts, in the case of the repair of dies.

Nickel plating is sometimes used for processing PVC, because of its ability to inhibit corrosion by hydrochloric acid. Nickel plating is usually thick, compared to chrome plating, and in some cases several layers are deposited to make up a thickness of up to 1 mm.

14.5 References

[1] ThyssenKrupp Materials UK Limited, website: www.thyssen.co.uk (tool steel composition and properties)

[2] Bohler-Uddeholm worldwide, website: www.bucorp.com, (for special steels Stavax ESR)

[3] Haynes International (for Hastelloy®)

[4] High-Performance Alloys, Special Metals Corporation, www.hpalloy.com (for Inconel alloys)

Index

Symbols

1.2083 steel *337*
1.2311 (P20) steel *333, 335*
1.2312 (P20+S) steel *336*
1.2316 steel *335, 337*
1.2344 (H13) steel *333, 334*
1.2738 (P20+Ni) steel *336*
1.2767 (EN30B) steel *334*
1.4462 steel *338*
1.8509 (EN 41B) steel *333*
Ø50 mm 11 SDR die *167*
Ø50 mm 17 SDR die *166*
Ø125 mm 11 SDR die *166*
Ø125 mm 17 SDR die *165*

A

above the distribution section *167*
aluminum heaters *260*
annuli *133*
apparent values *17*
average flow rate *321*
axial flow *237*

B

balanced dimensions *318*
barrier materials *297*
blown film *223*
body *131*
body heater *131*
body temperature *279*
bromides *331*

C

cable covering *12*
cable ducting *263*
calcium carbonate *331*
calculations *52*
cartridge heaters *260*
case-hardened *332*
ceramic heaters *260*
channel *78*
channel depth *73*
channel width *73*
choke ring *32, 33*
coextrusion *65, 224, 263*
coextrusion die *239*
complete die *313*
computer simulation *59*
cone *37*
convergence section *82*
corrosion *331*
corrosion resistant *340*
corrosion resistant plating *340*

D

data collection *11*
dead spots *65*
degradation *65, 220*
density *23, 176*
depth of spirals *275, 284, 317*
design brief *20, 23, 107, 108, 237, 264, 298*
design of three-layer die *302*
design scope *127*

die *24*
die-adjusting ring *131*
die body *196*
die bush *24, 28, 34, 131, 196*
die clamp ring *196*
die constant *54*
die design *23, 25*
die gap *75*
die geometry *112, 244*
die heater *131*
die land *28*
die rigidity *65*
die simulation *76, 314*
die trial *51*
die wall temperature *60*
dimensions of distribution *198*
distribution section *113, 131, 167, 271, 282*
distributor *197, 243*
draw down ratio *25, 27, 127, 239, 299*
draw down ratio balance *27*
DRB *27*

E

elastic deformation *65*
equipment *17, 18, 20*
ethylene vinyl acetate *297*
ethylene vinyl alcohol *297*
EVA *297*
EVOH *297*
experimental approach *51*
extrusion screws *332*

F

factor of proportionality *54*
feed balancing *317*
feed ports *275*
feed section *79, 112, 131, 167, 246, 276*
final assembly *11*
flange adapter *38, 131, 196*
flange heater *131*
flat sheets *223*
flexible PVC *154*
flow balancing *246*
flow in the channel *138*
flow leakage *138*
flow rate *182, 248, 279, 321*
flow variation *92, 139, 180*
fluid jacket heaters *260*
fluorides *331*
formulae *54*
freezing temperature *176*
fully hardened steels *333*

G

glass fibers *331*

H

hard chrome plating *340*
Hastelloy® *331, 339*
Hastelloy® C-276 *339*
HDPE *147*
heating of extrusion dies *260*
heat treatment *332*
Hooke's law *15*

I

Inconel® *339*
initial die design *165*
inside layer *248*
instability *221*
interfacial instabilities *65*
internal heating *261*

L

land section *82*
LDPE *143*
leakage *65*
low pressure losses *65*
low residence times *65*

M

mandrel extension *311*
mandrel height *71*

mandrel spacer *131*
manufacturing methods *11*
mass flow rate *60*
material *206*
material definition *320*
material information *14, 116, 127, 135, 175*
material residence time *13*
materials for extrusion dies *, 331, 331*
material stagnation *207*
materials used *298*
mathematical calculations *52*
melt flow *138, 179, 209*
melt flow characteristics *13*
melt flow rate *279*
melt fracture *65*
melt input temperature *60*
melt stagnation *52*
melt temperature *176, 279, 321*
melt variables *279, 288, 321*
mica band heaters *260*
micro-duct *237*
monolayer die *161, 191*
multilayer *223*
multilayer pipes *12*

N

nickel plating *340*
nitrided steels *332*
nitriding process *332*
number of bolts *256*
number of channels *74*
number of feed ports *284*
number of overlaps *170, 284, 317*
number of ports *170*
number of spirals *275, 284, 317*
nylon (PA12) *150*

O

optimum output *189*
output calculations *240, 266, 300*
outside layer *271*
overlaps *74*

P

PEEK *331*
physical properties *15*
pin *24, 41, 131, 196*
polycarbonate *331*
polyether ether ketone *331*
polyvinylidene fluoride *297*
power law exponent *54*
pressure drop *13, 52, 54, 182, 207, 231, 248, 279*
pressure grades *191*
processing conditions *60, 83, 116, 127, 135, 176, 206, 248, 279, 288, 298, 320*
product definition *13*
product range *13, 14, 23, 107, 237, 298*
product sizes *107*
profiles *223*
project definition *135, 175, 206*
project planning *11*
PVDF *297*

Q

quenched and tempered steels *335*
quick tool changes *110*

R

range of similar products *12*
redistribution *65*
reference diameter *170, 274, 283, 316*
relaxation chamber *29, 31, 73*
relaxation zone *309*
residence time *13, 52, 220*
results of variables *177, 207*
rheological *14*
rheology *15, 20, 52*
rheology data *23, 135, 175, 238, 298*
rheometer *52*
ring feed system *70*

S

SDR *163*
sealing section *72*
section above the distribution *131*
section above the spirals *80, 199, 324*
section past the spirals *276*
selection of die materials *11*
shark skin *221*
shear rate *13, 16, 17, 52, 207, 321*
shear stress *13, 15, 16, 52, 207, 234, 279, 321*
sheathing *224*
side-fed die *224*
simulation *76, 206*
simulation of materials flow *11*
simulation results *117, 177*
size of the extruder *19*
solving problems *119*
speciality steels *336*
specific heat capacity *23, 176*
specific heat of fusion *176*
spider *35, 41, 47*
spiral depth *170*
spiral die *65*
spiral height *72, 170, 274, 316*
spiral mandrel *131, 196*
spiral mandrel die *65*
spiral mandrel distributors *65*
spiral radius *170*
spirals *244*
standard dimension ratio *163*
STAVAX® ESR *338*
striping *253*
surface hardness *332*
swell phenomenon *25*

T

temperature change *182, 207*
temperature profile *234*
temperature variation *233*
tempering *333*
thermal conductivity *23, 176*
thermal properties *15*
thermodynamic *17, 18*
thermodynamic data *23*
thermodynamic properties *52, 135, 175, 238, 298*
third layer *289*
three-layer crosshead die *297*
three-layer die *263*
tightening torques *259*
tooling *242*
tooling section *115, 133, 268, 302*
tooling sizes *299*
torpedo *33, 37, 47*
type of extruder *19, 20*

V

values of PN *191*
velocity *321*
velocity profile *228*
viscoelastic behavior *52*
viscosity *15, 16, 17*
volumetric flow rate *221*

W

wall thickness *14, 23, 24, 237, 298*
wear *331*
wear resistant *332, 340*
wire covering *12*
work harden *331*

Sushil Kainth

Die Design for Extrusion of Plastic Tubes and Pipes

»Die Design for Extrusion of Plastic Tubes and Pipes« covers this topic from a uniquely practical perspective. The content draws on the author's over 50 years of experience in the plastics processing industry, most recently as head of the successful extrusion die manufacturing company he established in 1995. His approach is oriented toward solving production problems at the design stage using computer aided techniques for design and simulation of the plastic flow.

The book provides a step-by-step guide to extrusion die design, with worked examples to illustrate problem solving. It is shown how important melt flow variables (e.g., pressure drop, shear stress, shear rate, temperature variations, and distribution variations, etc.) of key materials are determined using FEM software. The detailed drawings of complete dies for various applications that are provided constitute a rare and valuable resource. Both mono- and multilayer pipes are covered.

Using the proven methods and examples from this book, the reader is well-equipped to understand dies for successful manufacture of tubes and pipes of many types.

Contents:

- Basic Considerations
- Project Planning
- Design of a Simple Die
- Simulation of Melt Flow
- Spiral Die
- Monolayer Die for Tubes ø 1 mm to ø 6 mm
- Monolayer Die for Tubes ø 4 mm to ø 16 mm
- Monolayer Die for Pipes ø 50 mm to ø 125 mm
- Monolayer Die for Pipes ø 140 mm to ø 315 mm
- Coextrusion Pipe Dies
- Coextrusion Die (ø 5 mm to ø 16 mm)
- Coextrusion Three-Layer Die (ø 20 mm to ø 65 mm)
- Three-Layer-Plus-Striping Die for ø 25 mm to ø 110 mm Pipes
- Materials for Extrusion Dies

HANSER

www.hanserpublications.com
Hanser Publications
ISBN 978-1-56990-672-9